MPR ASSOCIATES INC. ENGINEERS

MPR-3395
Revision 1
March 24, 2010

Viability of Developing a U.S. Domestic Source for Large Forgings for Nuclear Power Plants - A Cost/Benefit Study

Prepared for

United States Department of Energy

Viability of Developing a U.S. Domestic Source for Large Forgings for Nuclear Power Plants - A Cost/Benefit Study

MPR-3395
Revision 1

March 24, 2010

Principal Contributors

Richard P. Johnston
Douglas M. Chapin
John A. Hillaert
Thomas S. Lubnow, Jr.
Agustin Valdivia
Matthew J. Cassidy

Prepared for

United States Department of Energy

320 KING STREET ALEXANDRIA, VA 22314-3230 703-519-0200 FAX: 703-519-0224 http:\\www.mpr.com

Executive Summary

A study was conducted to develop an estimate of the world's existing capability to provide sets of integral forged steel blanks used to fabricate large components, e.g., reactor vessels (RVs) pressurizers and steam generators for nuclear power plants, specifically the Generation III+ light water cooled reactors. The largest of these steel forgings, defined as "ultra-large" in the steel industry, are forged from nuclear grade steel ingots weighing 350-600 metric tonnes (ref. 15). An "RV set" is defined within this study as the collection of integral forged blanks required to manufacture the large components making up one Generation III+ nuclear power plant.

Based on a comparison of current and predicted future global capacity and demand for ultra-large forgings needed to support new nuclear power plants for the period 2010-2030, it appears that there will be surplus forging production capacity available - all from non-U.S. sources. This is true even using a conservative approach which heavily discounts projected, but not yet operating, forging production capability. Thus, ultra-large forgings should be readily available to satisfy the U.S. demand for RV sets for all three of the U.S. nuclear expansion scenarios investigated.

There is currently no domestic capability to produce ultra-large RV set forgings. The largest domestic steel forgings are currently produced by Lehigh Heavy Forge located on the grounds of the former-Bethlehem Steel facility in Bethlehem, PA. The steel ingots used by Lehigh are cast by the ArcelorMittal steel mill, in Steelton, PA. Lehigh Heavy Forge operates the largest surviving open die heavy forge press in the U.S. The press is rated at 9,070 tonnes (10,000 tons) and is currently capable of working with ingots up to approximately 270 tonnes. The next largest domestic steel forging facilities have a much smaller ingot size capacity limited to a maximum of approximately 65 tonnes. As a result, there is no domestic forging facility that is even close to the 600 tonne ingot capacity that is required for ultra-large RV set forgings.

Based on this study, there is no evidence of plans by any of the major suppliers or NSSS vendors to establish a forging facility in the U.S. that could produce Generation III+ RV sets. The changes necessary to upgrade even the largest U.S. forging facility to be able to produce ultra-large RV sets would require replacement of nearly all the major plant equipment, including the forge press, the manipulator, the furnaces, the quench tanks, the cranes, and some of the buildings, as well as major upgrades to the machine shops and shipping and receiving facilities. These upgrades would carry a conservatively estimated cost of between $1 and $2 billion. Even using this approach, significant transportation issues would remain as a logistical obstacle for the largest domestic forging facility. The size and weight of ultra-large forged parts make transport by road or rail impractical. Direct access to deep water barge transportation is a fundamental requirement for economic viability of an ultra-large forging enterprise.

The construction and equipping of a domestic greenfield, stand alone, ultra-large steel ingot making and forging facility was considered as part of this study. The first order cost estimate of

a greenfield facility capable of producing four RV sets per year is roughly $1.5 to $2.5 billion. The schedule for procurement and construction is estimated to be approximately five to seven years.

The current business conditions and projected market risks do not support a viable business model for establishing an ultra-large forging capability in the U.S. The estimated costs far outweigh the projected direct benefit in a market-based economic analysis. Government funding may be a possible option if policy issues warrant such an effort. However, the level of government support required to make the activity viable would be extensive and subject to risk.

In summary, the report concludes that the cost/benefit trade-off is not favorable and does not support pursuing a domestic ultra-large forging capability. However, alternatives to a full-scope ultra-large forging capability may be viable, and the report provides several recommendations to investigate alternatives and/or facilitating selective upgrades to the U.S. forging infrastructure to support domestic nuclear power expansion.

Contents

1 Introduction 1-1

1.1 Background 1-1

1.2 Scope 1-1

2 Summary and Conclusion 2-1

2.1 Comparison of Large Forging Capability and Demand 2-1

2.2 Potential to Establish U.S. Domestic Large Forging Capacity 2-4

2.3 First Order Cost/Benefit Assessment Results 2-5

3 Comparison of Large Forging Production Capacity and World-wide Demand from Nuclear Power Plants 3-1

3.1 Assessment of Potential U.S. and International Ultra-Large Forging Capacity for the 2010 to 2030 Time Period 3-5

3.2 Assessment of Potential U.S. and International RV Set Demand for the 2010 to 2030 Time Period 3-12

3.3 Comparison of the Projected RV Set Supply and Demand for the 2010 to 2030 Time Period 3-19

4 Potential Costs and Schedule to Re-Establish Domestic Large Forging Capability 4-1

4.1 Scratch-Built Large Forging Capability 4-1

4.2 Upgrade of Existing U.S. Forging Facilities 4-7

4.3 Summary of Major Points 4-13

5 First Order Cost/Benefit Analysis 5-1

5.1 Costs 5-1

5.2 Benefits 5-1

5.3 Trade-off (not favorable) 5-3

5.4 Alternative approaches 5-3

5.5 Recommendations 5-4

6 References 6-1

Tables

Table 2-1. Current Estimated and Projected Annual RV Set Production Capacity 2010 to 2030 Time Period (RV sets/year) 2-2

Table 2-2. Comparison of Weighted Average Annual International RV Set Production Capacity and Average Annual international and U.S. Demand Estimates (RV Sets per year) 2-4

Table 3-1. Current Estimated and Projected Annual RV Set Production Capacity 2010 to 2030 Time Period (RV sets/year) 3-9

Table 3-2. Reactor Vessel Dimensions for Right-size and Large Reactors 3-11

Table 3-3. Summary of WNO's Estimate of New Generation III+ Power Plants through 2030 3-12

Table 3-4. RV Set Demand Estimated Based on WNO Data 3-13

Table 3-5. IAEA Projected Nuclear Power Generation Growth Rate for the years 2010 to 2030 and Estimated RV Sets Required by 2030 for Low, Medium and High Scenarios 3-16

Table 3-6. Total RV Set Demand Estimate Based on IAEA Data for the 2010 to 2030 Time Period 3-16

Table 3-7. Projected RV Set Demand Based on WNO Data (Repetition of Table 3-4) 3-18

Table 3-8. RV Set Demand Estimate Based on IAEA Data for the 2010 to 2030 Time Period (Repetition of Table 3-6) 3-18

Table 3-9. Comparison of Projected RV Set Demand Based on IAEA and WNO Data for the 2010 to 2030 Time Period 3-19

Table 3-10. Calculation of Weighted Average for Annual International RV Set Production Capacity 3-20

Table 3-11. Comparison of Weighted Average Annual International RV Set Production Capacity and Average Annual International U.S. RV Set Demand Estimates 3-21

Table 4-1. Rough Estimate of Potential Annual Government Carrying Cost 4-6

Table 4-2. Characteristics of U.S. Sites Assessed as Candidates for Upgrade 4-9

Figures

Figure 2-1. Expected RV Set Cumulative Global Production Capacity vs. Expected Cumulative RV Set Global Demand from 2010 to 2030. 2-3

Figure 3-1. Representative Sketch of PWR Generation III+ Reactor Vessel, Dimensions Based on Westinghouse AP 1000 Design (ref. 22) 3-3

Figure 3-2. Representative Sketch of BWR Generation III+ Reactor Vessel, Dimensions Based on the Toshiba ABWR Design (ref. 23) 3-4

Figure 3-3. Expected RV Set Cumulative Global Production Capacity (2010 - 2030)..... 3-10

Figure 3-4. Expected RV Set Cumulative Global Production Capacity vs. Expected RV Set Cumulative Global Demand through 2030. 3-20

Figure 4-1 Typical Timeline - Large Manufacturing Plant Engineering and Construction 4-7

1 Introduction

1.1 BACKGROUND

The Office of Nuclear Energy of the United States Department of Energy has conducted a number of studies to explore applicable technologies and assess the status of domestic infrastructure that could support a substantial expansion of the nuclear power industry. Two such studies were conducted in 2004, "Application of Advanced Construction Technologies to New Nuclear Power Plants," May 19, 2004 and "Study of Construction Technologies and Schedules, O&M Staffing and Costs, Decommissioning Costs and Funding Requirements for Advanced Reactor Designs," May 27, 2004. These reports, as well as work by the vendors and other organizations such as the Nuclear Energy Institute, identified that the production of the very large forgings[1] was, at the time of the reports, a future bottleneck for the construction of large numbers of nuclear power plants. Further, none of the needed forging capability is located in the United States Therefore, DOE-NE desired an assessment of U.S. new nuclear plant requirements, assessing foreign vendor capability to provide these forgings in light of parallel international demands, and determining whether it is desirable and cost effective for the U.S. to establish this domestic capability, including potential approaches for the United States government to support nascent domestic nuclear forging capacity expansion.

1.2 SCOPE

DOE-NE tasked MPR to carry out and document a study that provides the following:

- Accounting of international capacity for large forgings versus current and planned domestic and foreign project requirements.
- Assessment of resources and schedules required to establish large forging capacity in the U.S. for a range of potential scenarios depicting varying rates of expansion of the U.S. nuclear power capacity.
- First-order cost/benefit analysis relative to re-establishment of a U.S. capacity for large forging capability as well as a discussion and assessment of the benefits that a large forging capability would have regarding energy dependence and economic competitiveness.

[1] The largest forgings, defined as "ultra-large" in the steel industry, are forged from nuclear grade steel ingots weighing 350-600 tonnes and are further qualified in Section 3.

1.2.1 Report Organization

This report is organized into five chapters. Chapter 1 provides an introduction to the report. Chapter 2 provides the summary and conclusion. Chapter 3 documents the results of the assessment of foreign ultra-large forging capability and the demand for foreign and domestic projected RV set requirements. This assessment provides a range of potential demand scenarios and the resultant demand for large forgings relative to the expected capacity.

Chapter 4 discusses estimated costs and the schedules to re-establish a U.S. domestic large forging capability. These costs and schedules are based on two sources of data:

(1) Discussions with major NSSS vendors to establish their plans (if any) to provide an on-shore U.S. capability, as well as with others that are considering meeting this need. The intent is to review their plans and, in particular, the needs and potential means of Federal support to facilitate such and investment.

(2) Identification and assessment of possible sites for re-establishment of a large forging capability. This assessment included site visits to observe site conditions and determine what might be done to achieve the desired capability. Rough cost and schedule estimates are also provided, as appropriate.

Chapter 5 integrates all the information collected, and provides a first-order cost/benefit analysis for the low, medium and high scenarios for the projected rate of expansion of U.S. nuclear power generation capacity projected through 2030. Based on this cost/benefit analysis, the report develops recommendations for DOE-NE for potential follow-up activities.

2 Summary and Conclusion

2.1 Comparison of Large Forging Capability and Demand

Even employing a conservative approach to estimating the RV set forging production capacity that will be available through years 2010 to 2030, there appears to be a significant projected surplus of capacity from foreign sources indicated for all three global RV set demand scenarios (Low, Medium and High). This projected world surplus would make RV sets readily available to satisfy the domestic RV set demand for all three of the U.S. nuclear expansion scenarios investigated.

2.1.1 Existing Large Forging Capability

A literature search was conducted and a survey was carried out by phone and e-mail to develop an estimate of the world's existing capability to provide sets of integral forged steel blanks used to fabricate large components, e.g., reactor vessels (RVs), pressurizers and steam generators for nuclear power plants, specifically the Generation III+ light water cooled reactors. The largest of these steel forgings, defined as "ultra-large" in the steel industry, are forged from nuclear grade steel ingots weighing 350-600 metric tonnes (ref. 15). An "RV set" is defined within this study as the collection of integral forged blanks required to manufacture the large components making up one Generation III+ nuclear power plant. The "capacity" of the ultra-large forging production facility is characterized in terms of the total annual production of RV sets.

The only universally acknowledged and certified major supplier of RV sets for Generation III+ nuclear reactor designs is Japan Steel Works (JSW) with a current production capacity most often quoted at four (4) RV sets per year. JSW is reported to be upgrading its capacity in a two-phased expansion that is expected to triple production in the next two years. We also identified a number of emerging ultra-large forging facilities in France, Russia, China, and Korea that are reported to be either in production but not yet certified, undergoing capacity upgrades, or under construction.

The total projected ultra-large forging production capacity of these emerging facilities, together with the expanded capacity of JSW is shown in Table 2-1 in terms of RV sets per year (see Chapter 3 for details). These production capacity estimates are conservative, that is relatively low estimates of projected production capacity, as they include only the major international forging facilities and the results show significantly lower estimated production capacity growth rates than those announced for planned future expansion and construction of forging facilities. Two of the forging facilities that have announced upgrades to their forging capacities, China's SEC and Russia's OMZ, are not expected to have the capability to produce RV sets until 2012. L&T (India) and Bharat Forge (India) were not included in the supply calculation because a specific number of projected RV set production capacity was not described in literature review.

Table 2-1. Current Estimated and Projected Annual RV Set Production Capacity
2010 to 2030 Time Period
(RV sets/year)

Country - Company	Current Installed Production Capacity 2010 (Note 2)	Projected Global Production Capacity 2011 – 2012 (Note 3)	Projected Global Production Capacity 2013 - 2030 (Note 4)	References
Japan - JSW	4.0	**6.0**	**7.0**	1, 6, 7
China - Dongfang Heavy Machinery	0.0	**0.5**	**1.0**	2, 4, 7
China - China First Heavy Ind.	2.5	**3.0**	**3.4**	7, 14, 15
China - Shanghai Electric Company	2.5 (1)	**4.0** (1)	**4.8**	7
South Korea - Doosan	0.0	**0.5**	**0.9**	Note 5
France - Creusot Forge (Areva)	0.0	**0.5**	**0.9**	2, 7, 15
Russia - OMZ	1.0 (1)	**2.0** (1)	**2.5**	2, 7, 15
Total Projected Annual Capacity	**6.5** (1)	**10.5** (1)	**20.5**	

Note 1: China's SEC and Russia's OMZ, though reported to be operational, are not expected to be able to produce Generation III+ RV sets meeting all specifications until the 2012 time frame. However, the 2010 through 2012 values are listed in the table, above, because they are used to calculate the 2013 to 2030 expected production capacity.

Note 2: Numeric values in blue (gray when printed in black and white) represent production capacity either reported or expected to be operational in 2010 and those in black represent calculated quantities.

Note 3: Current Installed Production Capacity plus one-half of the production capacity reported to be currently under construction.

Note 4: Current Installed Production Capacity plus one-half of the production capacity reported to be currently under construction plus 25% of the production capacity planned that would be operational before 2030.

Note 5: Projected capacity was approximated based on references 5, 7, 13. However, no specific number of projected RV set production capacity was described in these sources.

2.1.2 Total International Demand

Estimates were collected and compared of the growth in the number of nuclear power plants for both international and U.S. generation. A typical example is the IAEA published estimates of projected international nuclear plant construction through 2030 (ref. 18). These estimates were compared and cross-checked against one another as discussed in Chapter 3, and were found to be reasonably consistent. Based on this work and judgments about the effect of financing issues, etc., a range of cumulative RV set demands for the period of 2010 through 2030 was developed based on “Low”, “Medium” and “High” growth scenarios of nuclear power. Figure 2-1 shows these three cumulative RV set demand projections overlaid on the cumulative RV set production capacity projection for the 2010 to 2030 time period (bar graph). This comparison shows that the capacity of the market to supply RV sets will likely exceed demand for all three of the projected demand scenarios. As a result, there is likely to be excess capacity available to meet

RV set demand. Note this analysis assumes that all new nuclear capacity added in the 2010 through 2030 time frame is filled by large (>1000 MWe) nuclear plants. The deployment of smaller plants is addressed separately, below.

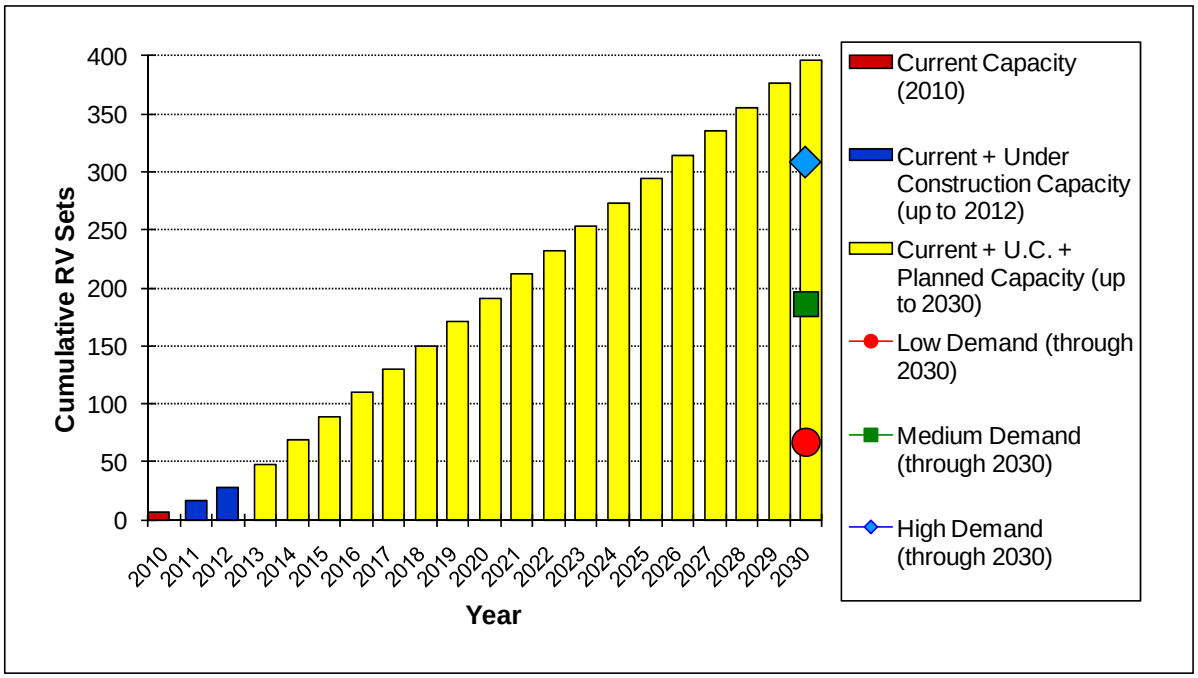

Figure 2-1. Expected RV Set Cumulative Global Production Capacity vs. Expected Cumulative RV Set Global Demand from 2010 to 2030.

2.1.3 Total U.S. Demand

The projected cumulative U.S. demand for RV sets needed to construct Generation III+ nuclear power plants in the years from 2010 through 2030 is considered in the context of three potential nuclear power expansion scenarios:

10 total - Low:	Nuclear power plant projects currently in advanced licensing plus a fraction of the other projects that have been announced
30 total - Medium:	Roughly the number of currently announced plants
50 total - High:	Escalation of the Medium scenario by 66%, assuming significant success from early Nuclear Generation Projects.

The “Low”, “Medium” and “High” scenarios represent three sets of assumptions that correspond to conditions with varying levels of support for the expansion of nuclear power in the U.S. The three scenarios assume a range of projected economic conditions, regulatory initiatives, and

success in deploying new Generation III+ nuclear power designs that affect on the rate of nuclear power expansion.

2.1.4 Additional Production Capacity Needed for U.S. Demand

Using U.S. projected nuclear power expansion and RV set demand projections mapped against the results of the international production capacity analysis, an estimate of the incremental RV set supply that might be needed to support the construction of new Generation III+ power plants in the U.S. was made. The results are shown in Table 2-2. This projection shows a surplus of RV set production capacity available from international sources to satisfy the total projected RV set demand in the U.S. needed to support the expansion of nuclear power generation for all three of the growth scenarios (Low, Medium and High).

Table 2-2. Comparison of Weighted Average Annual International RV Set Production Capacity and Average Annual international and U.S. Demand Estimates (RV Sets per year)

RV Set Demand Scenario	**Low (RV Sets per Year)** Note 1	**Medium (RV Sets per Year)** Note 2	**High (RV Sets per Year)** Note 3
International Supply	18.9	18.9	18.9
International Demand	2.9	7.7	12.9
U.S. Demand	0.5	1.6	2.5
Surplus International Production Capacity Available to Satisfy U.S. Demand	**15.5**	**9.6**	**3.5**

Note 1: Under construction or in advanced licensing process plus 33% of planned expansion.
Note 2: Under construction or in advanced licensing process plus all planned expansion.
Note 3: Medium demand scenario increased by 66%.

2.2 POTENTIAL TO ESTABLISH U.S. DOMESTIC LARGE FORGING CAPACITY

2.2.1 NSSS Vendor and Large Manufacturer Plans

Based on this assessment, there is no evidence of real plans by any of the major suppliers or NSSS vendors to establish a forging facility in the U.S. that would be able to make Generation III+ RV sets. There is some interest by existing smaller-scale forging suppliers in the U.S., but they would need substantial government support and guaranteed demand to be successful. This is discussed in more detail below and in Chapter 4.

2.2.2 Identification of Sites

Four U.S. facilities, three of the remaining large forging facilities still in operation and the largest nuclear grade steel ingot casting steel maker in the U.S., were identified as candidates for site visits. The literature search and discussions with the Forging Industry Association flagged these facilities as the largest of the steel ingot casting or forging operations in the U.S. Based on the fact that infrastructure and expertise is already in place, these facilities were considered to have a siting advantage. These facilities might also be capable of expansion or upgrades to produce 600 tonne ingots and forgings at a lower cost and shorter schedule than a greenfield site.

- Elwood City Forge, New Castle, PA
- Jorgensen Forging, Tukwila, WA
- Lehigh Heavy Forge, Bethlehem, PA
- ArcelorMittal Steel, Steelton, PA

Three of these facilities were selected for site visits and assessed as candidates for establishing an ultra-large forging capability.

The Ellwood City Forge, the ArcelorMittal Steelton steel production facility, and the Lehigh Heavy Forge were visited. In addition to conducting on-site inspection of these facilities and observing typical operations during the assessment visits, we met with the management personnel of each facility. Considerations and decisive factors for upgrading the facilities were discussed. These discussions show there is strong interest in major facility upgrades, but no ready source of funding. Each forge or steel maker's assessment of the projected domestic market demand indicates the current or foreseeable market conditions are not sufficient to support substantial expansion. In order to bring any substantial expansion to fruition and assure success, major U.S. government funding and support would likely be required, as well as the means to guarantee long term support to sustain operations.

2.3 FIRST ORDER COST/BENEFIT ASSESSMENT RESULTS

2.3.1 Market Entry Barriers to Development of Domestic Capability

It appears there will be excess overseas RV set production capacity above that required to meet off-shore demand, and that excess production capacity can be used to support the expected U.S. demand. Nevertheless, there exists the possibility that a U.S. RV production enterprise could carve out a share of the domestic and international market if it were to achieve a competitive advantage over international suppliers. Based on this study, such a result is unlikely because:

- The differences between international and domestic transportation costs for a completed RV forging are not a significant market decision driver; estimated to be on the order of a few million dollars compared to an estimated $300 - $350 million market price for the complete RV set. (ref. 27)

- It is unlikely that a U.S. customer will be willing to pay a significant cost premium for surety of domestic supply. This is due to a number of considerations including the

removal of export control barriers, no perceived advantage for production risk factors (labor stability, regulatory impediments, etc.) and an expectation that the diversity of international suppliers would minimize political risk.

- Quality will be a requirement for market entry, and will not be an effective discriminator for a U.S. ultra-large forging supplier.

- Several of the international suppliers receive direct or indirect government subsidies to lower cost of production. Cost will likely be the primary factor in allocation of future market share in this industry.

Based on the above, it is considered unlikely that market signals, in and of themselves, will be sufficient to promote the development of a domestic ultra-large nuclear forging capability. Nevertheless, depending on the cost, it still might be desirable for the U.S. government to consider support of development of such a capability for reasons discussed further below. The many factors that affect the feasibility of establishing a viable domestic production capability include: the capital cost required to establish a U.S. supply of RV sets, the government support that might be necessary to promote such an investment by a commercial entity, the magnitude of the potential annual subsidy that might be required to sustain such an operation, and the softer barriers to market entry that the U.S. government might be able to help mitigate via investment in research, development and deployment.

2.3.2 Costs and Schedule to Establish U.S. Domestic Capability

A first order scope and cost estimate for establishing a U.S. ultra-large forging production capability was developed using the facilities and capabilities of the Japan Steel Works (JSW) Muroran plant as a general template (see Chapter 4). The Muroran forging facilities site has a current annual capacity to produce up to four (4) RV sets per year (refs. 7, 15).

The existing domestic large forging facilities are not capable of producing ultra-large forgings and cannot be feasibly upgraded to cast, forge and machine ultra-large forgings. The only practical alternative for establishing U.S. capacity would be to construct a new stand-alone greenfield (or brownfield) facility.

The first order cost estimate for construction of a stand-alone, scratch-built complex capable of casting and forging 600 tonne ingots for RV sets is estimated to be $1.5 to $2.5 billion. This estimate assumes all off-site supporting infrastructure (such as heavy transportation facilities, water supply, high voltage electrical interconnection, power supply and transmission capacity, etc.) is in place. The supporting infrastructure is likely to be a significant adder if it must also be provided from scratch.

An accelerated schedule to build an ultra-large forging facility is estimated to require a minimum of five to seven (5 to 7) years assuming some preliminary engineering and site selection is complete at the time of funding. Preliminary information indicates the fabrication facilities for the large forging presses and other major equipment are completely subscribed with up to four or five years of lead time for new orders.

Section 4.1.3 of the report discusses the potential financial support that might be required to jump start and sustain an RV set production facility located in the U.S. The rough order of magnitude calculation is based on an assumed construction cost of $2 billion and project staffing based on similar international facilities. The estimates indicate that significant subsidies on the order of $100 million/year might be required for periods of time when the market share and market value of RV sets is not able to support a production rate nearing the maximum capacity of four RV sets per year.

2.3.3 Benefits

Since there is a substantial projected RV set production capacity surplus projected for all three nuclear power expansion cases evaluated, the expansion of nuclear power in the U.S. can be sustained without building a domestic ultra-large forging capability. Further, the cost is large and the long lead time for major equipment and lengthy construction schedule would ensure that many years would pass before the facility could be operational. Thus a first order cost/benefit analysis is strongly unfavorable. If pursuing the building of such a facility in the U.S. is deemed to be worthwhile, it needs to be based on ancillary or collateral benefits.

While a detailed identification and consideration of the collateral or ancillary benefits is beyond the scope of this study, some are briefly identified and considered:

<u>Potential for off-shore sales of RV-sets</u> - None of the major NSSS suppliers are U.S. owned, so sales will be difficult unless a large portion of the projected international RV set capacity fails to materialize or the U.S. facility has a major advantage such as lower cost or faster delivery. However, it appears the international suppliers will be in operation sooner than any new domestic RV set forging supplier could be completed. Another factor is that, in many cases, the international suppliers are closely allied with and sponsored by its government; and one would expect that government to intervene to protect the market share and competitive advantage of their domestic RV set forgings supplier.

<u>Sustain/expand U.S. large forging industrial base</u> - Large steel forgings are required to support vital defense needs (U.S. Navy - aircraft carrier and submarine propulsion, surface ship shafting, and submarine shafting). Sustaining these activities is a real and strategic benefit; however, the existing U.S. forging capacity is capable of meeting these demands.

<u>Preserve and expand U.S. intellectual capital and manufacturing art</u> - Once lost, the “art” of casting very large, high quality steel forgings is not easily revived and takes years to re-establish. There is a real benefit of preserving the U.S. intellectual capital that still exists, at least at the scale of current operations. This benefit would accrue to the U.S. but it is difficult to monetize or quantify.

<u>Energy independence</u> – With no existing domestic production facilities, the expansion rate of nuclear power in the U.S. will be dependent on imported RV sets. Clearly, the establishment of a domestic capability would be a benefit in support of U.S. energy independence, but it is difficult to monetize or otherwise quantify.

Economic Competitiveness - U.S. sales of new design nuclear power plants abroad and domestically would be helped by a domestic capability. At present, it appears the best chance for sales of nuclear components produced in the U.S. would be for new designs under development featuring smaller reactors. These smaller reactors designs will not likely require ultra-large forgings. This is discussed further in Section 2.4.

Jobs – Creating new jobs would be a benefit realized with construction and operation of a U.S. ultra-heavy forging capability. A number of one-time jobs would be created in support of the construction and long-term, relatively high-paying, manufacturing jobs would also be sustained by the operation of the facility. The creation of the short-term jobs from construction and the longevity of the long-term jobs would ultimately depend of the economic viability of the enterprise. That in turn would likely require a U.S. government willingness to subsidize both the initial construction and sustained operations, as well as assure/support long-term demand.

It has been estimated that the amount of labor man-hours for the rough and finish machining of one RV set of forgings is on the order of 100,000 man-hours - or about 50 full-time equivalent skilled laborers for a year. Factoring in the manpower for the steel making, the forging, the heat treating and the handling processes, this could result in the equivalent of 100 new full-time equivalent jobs per year for each RV set of forgings produced. Thus, from a jobs perspective, the production capacity of one RV set of forgings correlates to about 100 new manufacturing jobs. Similarly, four RV sets per year would support approximately 400 new manufacturing jobs. The direct payroll and benefits from these jobs can be estimated at over $100,000 per employee for a total of $10 - $40 million per year. The jobs and other economic benefits created from the indirect and induced ripple effect economic impact could be several times that number. The total economic impact would include the direct, indirect and induced effects and could be expected to far exceed the employee payroll and benefits.

Revenue – Without a domestic source of ultra-large forgings, the revenue from sales of the RV sets purchased to manufacture the new crop of Generation III+ reactors in the U.S. will be forfeited to foreign suppliers. With a projection of the U.S. demand estimated at 10 – 50 new Generation III+ nuclear plants to be built over the next 20 years and an assumed value of $350 million per RV set (ref. 27) , the direct loss to the U.S. economy would range from $3.5 to $17.5 billion in sales.

2.3.4 Cost/Benefit Trade-Offs

Overall, the cost/benefit trade-offs are not favorable. The initial capital investment cost for a domestic ultra-large forging facility (estimated to be over $2 billion) is far beyond the reach for any domestic manufacturer. The cost of building a greenfield facility in the U.S. is likely to be far above the cost associated for the existing foreign competition to simply expand the capacity of their existing facilities. Conversations with the NSSS suppliers have revealed that they do not consider such a U.S. domestic investment to be economically viable. It is also unlikely that any of the NSSS suppliers independently have the financial means for such a large capital investment. In addition, the construction lag for a new domestic ultra-large forging facility would be five to seven years from inception to production. This time lag would allow the legitimate foreign competition adequate time to ramp-up their capacity to the point that a U.S. domestic manufacturer would probably be unable to capture a meaningful amount of the new

opportunities in a market with surplus production capacity. From the economic perspective of creating new U.S. manufacturing jobs, it would appear that less than a total of 500 new, long-term manufacturing jobs would be created by a new ultra-large forging facility, which roughly translates to an infrastructure investment of several million dollars per new long-term manufacturing job. From the perspective of creating new short-term construction jobs and short-term manufacturing jobs associated with new plant equipment, it is estimated that at least half of the $2 billion investment would be associated with U.S. domestic labor, and approximately one third of the investment would likely go toward procurement of foreign-made specialty equipment, such as a heavy forging press.

In conclusion,

1. DOE pursuit of direct financial support of a U.S. stand-alone ultra-large forging capability does not appear practical. The barriers to establish this capability are so large that it does not seem practical for the U.S. DOE to try to overcome the barriers even with the customary means of private industry support and assistance, such as loan guarantees, grants, etc. A long-term, guaranteed, "take-or-pay" contract from commercial customers seems required to justify the economics of the project; however, it does not appear practical for DOE to engage in these business relationships. On the other hand, if a prospective forging manufacturer develops a base of credit-worthy commercial customers and reluctance of commercial lenders to finance the project becomes the only barrier to completing a project, DOE credit support could be very effective and important.

2. Conditions warrant that the DOE explore other alternatives to support the industry via reactor vessel design and manufacturing approaches that eliminate the need for very large forgings. These alternatives might include:

    - Expand and improve domestic large forging capability recognizing the domestic limits of the existing equipment and facilities. Select the expansion or upgrades after a search for "sweet spots" at particular sizes. For example, the existing domestic facilities probably have the capability to produce many of the forgings required for the more compact Generation III+ reactor vessel designs excluding the largest RV set forgings. Targeting this smaller forging market is consistent with the potential shift in U.S nuclear power design focus to smaller more compact reactors and for the smaller "right-sized" reactors being proposed. DOE-NE has encouraged U.S. designs featuring reactor vessels with forgings within current U.S. manufacturing limitations.

    - Encourage industry focus on forging special materials like stainless steels, special corrosion resistant alloys for non-water coolants, and high strength or high temperature alloys of particular interest to future advanced nuclear plant designs, such as those used for other high strength-high temperature process applications and advanced fossil fuel cycles.

    - Evaluate the feasibility of long term R&D to provide non-metallic reactor vessels. Possibilities could include the use of composites, perhaps with auto-frottage liners. Concrete has also been used in the past for some gas-cooled reactor vessels and

Japanese utilities and designers more recently considered concrete reactor vessels in plants with substantially higher power ratings than the largest current machines.

- Explore “piggy-backing” desired U.S. forging capability for nuclear and non-nuclear uses (commercial and DOD) into a mutually supportive business model for both steel making and forging operations, modifying or expanding existing facilities to achieve the desired capability, and perhaps increase efficiency and capacity through modernization of facilities and infrastructure.

These and other alternatives could be explored in follow-on studies – they are beyond the scope of the present study.

3

Comparison of Large Forging Production Capacity and World-wide Demand from Nuclear Power Plants

A significant portion of the new nuclear power plants, both in the U.S. and internationally, will be Generation III+ designs (ref. 17). The Generation III+ nuclear power plant designs are rated at 1100 MWe to 1750 MWe with reactor vessels that are significantly larger than the reactor vessels currently in operation in the U.S. The new reactor designs feature major reactor components that are specified to be manufactured from very large integral steel forgings.

The smaller first and second generation nuclear power plant designs had reactor vessels (RVs), pressurizers, and steam generators that were assembled from rolled steel plates welded together. The welds in these vessels, particularly the vertical seam welds in the high radiation zones of reactor vessels, imposed an operations and maintenance ("O&M") burden for non destructive evaluation ("NDE") and testing that is time consuming and costly for in-service inspection. The vertical welds also potentially limit the life of the reactor vessel due to fast neutron flux damage and other radiation induced effects. As a result, the owner-operators imposed requirements that compelled the nuclear reactor designers to shift to ring forgings in the reactor vessels and eliminate the vertical seam welds. Eliminating the vertical welds in reactor vessels pressurizers and steam generators also reduce the in-service inspection requirements. These Generation III+ design specifications, coupled with the drive to build larger plants to achieve economy of scale, require very large integral forgings for these major components.

The largest of these forgings, defined as "ultra-large" in the steel industry, require ingots weighing 350-600 tonnes (ref. 15). Due to their size, these forgings are best produced using forging presses with ratings between 14,000 and 15,000 tonne capacity. These very large forging presses must be capable of accepting ultra-large ingots and have sufficient clearance to forge components that can be up to 24 feet in diameter and 15 feet high. For example, the ingot size required to make the largest forged steel component of the reactor vessel for the Areva EPR (the nozzle ring) is approximately 480 tonnes. We understand this ingot undergoes rough forging and machining to produce a nozzle ring of approximately 170 tonnes..

Figures 3-1 and 3-2 show representative sketches of PWR and BWR Generation III+ reactor vessels with dimensions based on the Westinghouse AP1000 and Toshiba ABWR reactors, respectively. The dashed lines in both figures mark divisions between individual forged pieces. These dashed line markings are representative of PWR and BWR Generation III+ reactor vessels in general, but are not intended to depict specific break points in the assembly of the AP1000 or ABWR reactors. Figure 3-1 shows that a PWR Generation III+ reactor vessel is typically composed of four large forgings; whereas Figure 3-2 shows that a BWR Generation III+ reactor vessel is typically manufactured from seven large forgings. The nozzle ring, which is the forged

piece located underneath the reactor head, requires the largest ingot size for a reactor vessel assembly in both PWR and BWR reactors.

Facilities having the equipment necessary to produce forgings of this magnitude are not common, and those certified to produce these high quality alloy steel ultra-large forgings are the elite of the world-wide forging industry. The throughput of forging facilities that are capable of production on this scale is limited. In terms of RV sets, annual production rates are typically measured in single digits. For that reason, the production capacity and available supply of ultra-large forgings is in question.

The purpose of this chapter is to assess the projected production capacity of ultra-large forgings for the 2010 through 2030 time period. The chapter is divided into three sections:

1. Assessment of potential U.S. and International ultra-large forging supply

2. Assessment of potential U.S. and International RV set demand

3. Comparison of the projected RV set supply and demand to determine the RV set excess/deficit production capacity

For the purpose of this study, the "forging production capacity" is characterized in terms of the total annual production of RV sets. An "RV set" is defined as the collection of ultra-large integral forged blanks required to manufacture one Generation III+ reactor and the associated steam generator elements.

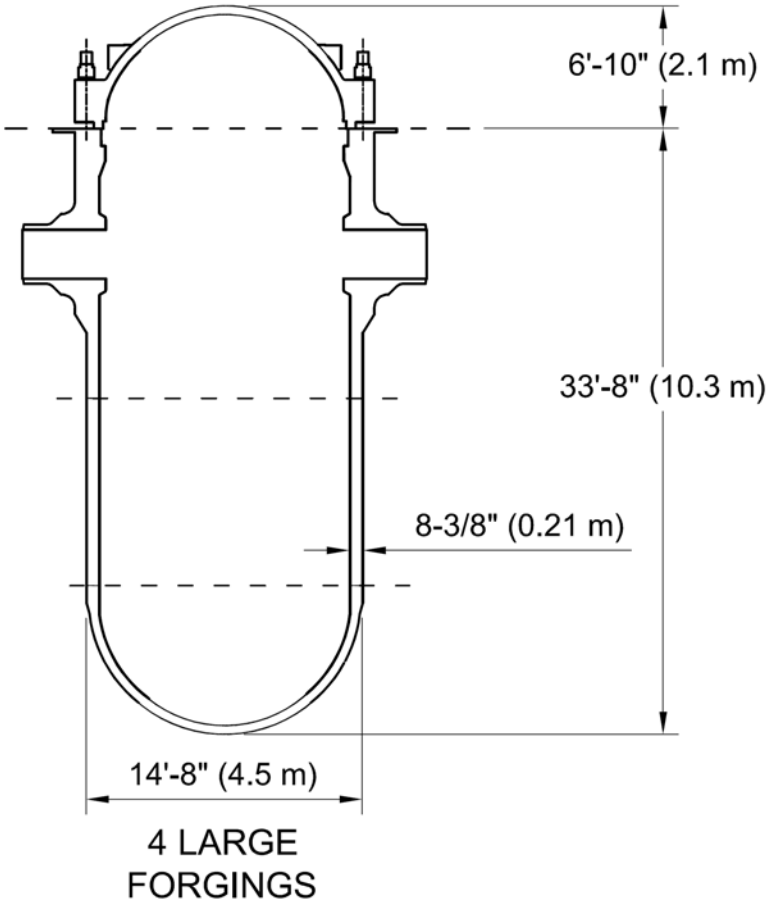

Figure 3-1. Representative Sketch of PWR Generation III+ Reactor Vessel, Dimensions Based on Westinghouse AP 1000 Design (ref. 22)

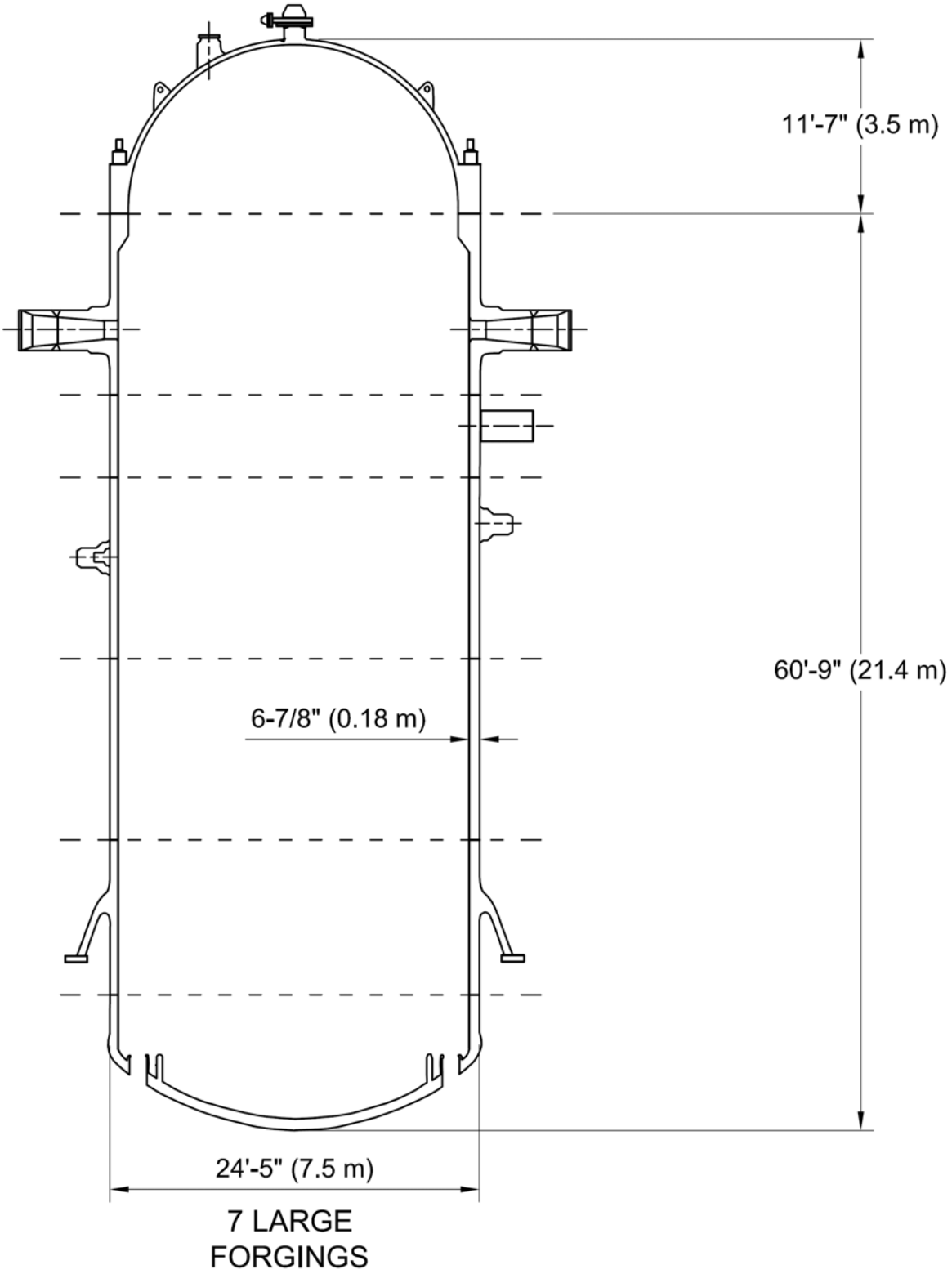

Figure 3-2. Representative Sketch of BWR Generation III+ Reactor Vessel, Dimensions Based on the Toshiba ABWR Design (ref. 23)

3.1 ASSESSMENT OF POTENTIAL U.S. AND INTERNATIONAL ULTRA-LARGE FORGING CAPACITY FOR THE 2010 TO 2030 TIME PERIOD

The United States does not have the capability to produce forgings in the ultra-large range (ref. 1). Of the sites visited for this study, the Lehigh Heavy Forge and Ellwood City Forge are two of the facilities that remain in operation in the U.S. that can produce large forgings. Of the two, the Lehigh Heavy Forge in Bethlehem, Pennsylvania, can produce much larger forgings and operates what is reported to be the largest heavy forge in North America with the capability to forge ingots of up to 270 tonnes and 3.3 meters (11 ft) in diameter (ref. 7). Both facilities lack the capability to make the large forged rings needed to manufacture Generation III+ reactor vessels (ref. 1).

In general, the U.S. domestic forging industry has not been significantly upgraded since the 1970's and has not kept pace with the international forging industry (ref. 1). Accordingly, all of the world-wide ultra-large forging production capacity is located outside of the U.S. This is attributed to a number of factors including a lack of domestic demand and the lack of integration with the "melt shops" that supply the hot steel ingots to the forges (ref. 7). A "melt shop" is the industry term for the facility containing one or more electric arc furnaces and ancillary processes and equipment to produce steel ingots.

In order to determine the international capacity for production of ultra-large forgings, we tallied the published maximum annual production rate of the major forging facilities capable of producing Generation III+ RV sets, as identified by a literature search. The actual annual capacity to produce the size and quality of steel forgings for Generation III+ RV sets was not verified by on-site inspection. A brief description of the current and projected ultra-large forging annual production capacity of each of the major contributing countries is provided below.

3.1.1 Existing Production Capacity

The only ultra-large forging production capacity identified in the literature search currently in operation is located in Japan (Japan Steel Works). Other facilities are reported to be developing that capability in 2010 or the near future in China (China First Heavy Industries and China Erzhong), France, (Areva Creusot Forge), South Korea (Doosan Heavy Industries) and Russia (OMZ Izhorskiye Zavody). The literature search revealed conflicting information regarding current and projected production capacity for ultra-large forging. The forge at China First Heavy Industries and China Erzhong was purported to be in operation in October 2009 in one reference (ref. 7) and as scheduled to be in operation sometime in 2010 in other references (ref. 14, 15). There is also conflicting information in the references reviewed in the literature search for the OMZ Izhora (OMZ Izhorskiye Zavody) forging facilities located in Russia. The OMZ facility is reported to be capable of producing ultra-large forgings in one reference (ref. 7). Another reference indicates this capability is still under development (ref. 4) and the brochure on the OMZ website (ref. 21) sets the current capacity at a maximum ingot weight at 360 tonnes. Another forging facility located in China, DHI's Changwong Plant, will reportedly be able to produce ultra-large forgings sometime in 2010 (ref. 15).

Japan Steel Works ("JSW")

JSW's Muroran plant, located on the Island of Hokkaido, has been the world's only recognized source for ultra-large forgings for RV sets. Forgings can be produced from ingots as large as 600 tonnes (ref. 6). JSW has been making forgings for nuclear plant components to U.S. Nuclear Regulatory standards since 1974. JSW is the acknowledged leader in this field and reportedly supplies approximately eighty percent (80%) of the world market for large forged components for nuclear power plants. JSW has a waiting list with lead times reported to range from three to eight (3 - 8) years (refs. 1, 19 & 37). Current production capacity is most often quoted at four (4) RV sets per year.

JSW has announced a two phase expansion of their Muroran plant. The first stage is expected to be completed some time in 2011, with an approximate cost of 50 billion Yen (US$523 million), which will increase their production capacity by four (4) RV sets per year. The second phase expansion of the Muroran plant, a 30 billion Yen (US$314 million) effort, will reportedly provide capacity to produce an additional four (4) RV sets per year and is scheduled for completion in 2012 (ref. 6). These two planned expansions at the Muroran plant are expected to increase its total capacity to approximately twelve (12) RV sets per year by 2012 (refs. 1, 6, 7, and 8).

China First Heavy Industries ("CFHI")

CFHI is reported in the literature to currently have the capability to produce and forge ingots up to 350 tonnes with an output of 2.5 to 3 RV sets per year. CFHI has announced it is investing CNY2.3 billion (US$337 million) to increase its production capacity to supply up to 600 tonne ingots for ultra-large forgings and claims to be capable of producing 3 to 5 RV sets per year (refs. 7, 14, 15).

3.1.2 Potential Future Production Capacity

New ultra-large forging facilities are reportedly being built in China (Shanghai Electric Company and subsidiaries), South Korea (Doosan), France (Creusot Forge) and Russia (OMZ Izhora and Zi-Podolsk). New production capacity in the United Kingdom (Sheffield Forgemasters) and India (Larson and Toubro and Bahrat Forge LTD) is still in the planning stages.

China

Shanghai Electric Company (SEC) and Dong Fang Electric Corporation in China have announced that they are planning to build forges that can accept 600 tonne ingots that reportedly will be in operation sometime in 2010. Total planned production capacity is 3 RV sets per year (refs. 2, 4, 7).

South Korea

Doosan Heavy Industries (DHI) has announced that it is undertaking a major investment in casting and forging capacity. The planned upgrades are to include a 17,000 tonne forging press, scheduled to be in production sometime in 2010. The new forge is reported to be able to work with ingots up to 540 tonnes. DHI's Changwon plant has a forging press rated at 13,000 tonnes already in operation (refs. 5, 7, 13).

France

Areva has made owning a portion of its supply chain part of its business strategy. With that strategy in mind, Areva purchased SFARsteel which includes the Creusot Forge in 2006. This was followed the purchase of a 1.3 percent equity stake in ultra-large forging supplier JSW in 2008 (ref. 1). An August 2008 announcement stated that Areva invested €30 million Euros (US$20 million) in the Creusot Forge in 2006 and had made plans to invest another 40 million Euros (US$26 million) in 2008 (ref. 2). Areva also announced it will invest an additional 100-120 million Euros (US$150 - 180 million) in their Creusot Forge subsidiary to increase the production of forgings used to manufacture major reactor components (ref. 15). That project would increase the reported capacity of the forging press from 10,000 tonnes to 16,000 tonnes. Following completion of the planned upgrade projects, the forging plants are projected to be able to produce between 2 to 2.5 RV sets per year. Areva has stated that it is currently capable of making slightly more than one RV set per year, thus this expansion effort represents a capacity increase on the order of 200 - 250 percent (refs. 2, 15). In the near term, Areva will outsource to JSW (ref. 15).

Russia

OMZ Izhora (OMZ Izhorskiye Zavody) and parent company, Uralmash-Izhora Group states that it has the capability to forge single components from ingots of up to 360 tonnes (ref. 21). An expansion is reported to be in progress to upgrade this capacity to work ingots up to 600 tonnes to be in operation sometime in 2011 (refs. 2, 4, 7, 15).

United Kingdom

Sheffield Forgemasters in the U.K. may receive government help to build a forge capable of handling a 500 tonne ingot (ref. 2). It currently has a 10,000 tonne forging press capable of working up to 300 tonne ingots. Forgemasters is looking at financing options for installing a 15,000 tonne press which will handle up to 500 tonne ingots. A decision on U.K. government funding is reported to be imminent; with up to 30 million GBP (US$48 million) of the 100 to 140 million GBP (US$160 to US$225 million) cost being provided by the government (ref. 7).

India

Larsen & Toubro (L&T) has announced plans for the construction of new capacity for ultra-large forgings. L&T has plans to be a supplier for AP1000 component production and is reported to have signed agreements to be a future supplier of ultra-large forgings with GE-Hitachi (refs. 3, 7, 9).

The Bharat Forge, located in Baba Kalyani, India, made an announcement in July 2008 that the company would manufacture ultra-large forgings for both thermal and nuclear power plants. The Rs1,000 crores to Rs1,200 crores (US$210 to US$260 million) plant would reportedly be operational sometime in 2011 and would have the capability to produce components that weigh more than 500 tonnes, as well as high-pressure piping, condensers and heat exchangers (ref. 15). BFL reportedly has a 400 tonne forging press located at Pune and a 14,000 tonne press is due to be commissioned in the 2011-12 timeframe (ref. 7).

3.1.3 Ultra-Large Forgings Production Capacity Estimation

A summary of the current, under construction, and planned capacity for each of the major forging facilities is listed in Table 3-1. This data is based on information from announcements and references in the available literature. There is some inherent uncertainty in accepting the ultra-large forging production capacity as reported in the literature at face value; and this information is difficult to quantify with any accuracy. Conflicting reports, even for existing ultra-large forging production capacity, were found in the literature search. The conflicting data from the references indicate that the uncertainty increases as applied to the reports of capacity under construction, and can be considered to further escalate as the dates for completion of planned capacity stretch into the future. Another factor that increases the uncertainty for planned ultra-large forging production capacity is the ability to produce the size and quality of forgings demanded by the Generation III+ reactor designs. This includes the requirement that suppliers of nuclear quality forgings for primary system pressure boundary service in U.S. plants must have both an ASME N Stamp certification and appropriate elements of a nuclear Quality Assurance program meeting 10CFR50, Appendix B requirements.

This critical "quality" factor was not addressed in the references from the literature search, but was highlighted in the input from the representatives of the NSSS vendors obtained during the telephone interviews. For example, quality issues are reported to be a factor for the SEC forge in China and doubts have been voiced concerning the capabilities of the OMZ facility in Russia.

Assumptions and Caveats for Ultra-Large Forging Production Capacity Calculation

In an effort to make a high-level estimate and projection of the world's ultra-large forging capacity in terms of the annual production of RV sets through the year 2030, the following conventions were followed and assumptions made as part of the data treatment process and presentation:

1. Data used for the ultra-large forging capacity estimation is based on the data for each country's ultra-large forging production capacity described in Section 3.1.2, above.

2. The "Low" production capacity/supply scenario represents the current ultra-large forging annual production capacity.

3. The "Medium" production capacity/supply scenario represents the current ultra-large forging production capacity and adds a component representing the forging production capacity that is reported to be under construction. It is assumed that only fifty percent (50%) of the production capacity under construction will be completed. The rationale for this approach is that some of the references reporting the production capacity/supply showed conflicting information regarding forges under construction. Projects under construction are also typically recognized as being subject to a substantial degree of completion risk. Accordingly, the uncertainty for projected forging capacity from these projects is considered to be significant. The data treatment acknowledges this uncertainty and conservatively assumes that only fifty percent (50%) of such projected production capacity will reach operation.

4. The “High” production capacity/supply scenario represents the current ultra-large forging production capacity plus twenty-five percent (25%) of the ultra-large forging production capacity reportedly planned for construction. This assumption follows the approach taken by the “Medium” scenario and also follows an inclination toward conservative (low) production capacity/supply estimation methodology. This assumption also takes into account the uncertainties involved in successfully financing, constructing and meeting exacting quality standards.

Ultra-Large Forging Capacity Results

Applying the assumptions and caveats listed above, the results of the ultra-large forging production capacity analysis are summarized in Table 3-1, below. These production capacity estimates are conservative; that is, these are in the low range of potential capacity projections. These estimates are based on a methodology that includes only the major international forging facilities. The results project significantly smaller estimated production capacity rates than those announced by the forging facilities for planned future expansion and construction. Further, China's SEC and Russia's OMZ are not considered to have the capability to produce RV sets until 2012. In addition, L&T (India) and Bharat Forge (India) have not been included in the supply calculation because a specific projected RV set production capacity was not described or called out in the literature review.

Table 3-1. Current Estimated and Projected Annual RV Set Production Capacity
2010 to 2030 Time Period
(RV sets/year)

Country - Company	**Currently Installed Production Capacity 2010** (Note 2)	**Projected Global Production Capacity 2011 to 2012** (Note 3)	**Projected Global Production Capacity 2013 to 2030** (Note 4)	**References**
Japan - JSW	4.0	**6.0**	**7.0**	1, 6, 7
China - Dongfang Heavy Machinery	0.0	**0.5**	**1.0**	2, 4, 7
China - China First Heavy Industries	2.5	**3.0**	**3.4**	7, 14, 15
China - Shanghai Electric Company	2.5 (1)	**4.0** (1)	**4.8**	7
South Korea – Doosan Heavy Industries	0.0	**0.5**	**0.9**	Note 5
France - Creusot Forge (Areva)	0.0	**0.5**	**0.9**	2, 7, 15
Russia - OMZ	1.0 (1)	**2.0** (1)	**2.5**	2, 7, 15
Total RV Set Production Capacity	**6.5** (1)	**10.5** (1)	**20.5**	

Note 1: China's SEC and Russia's OMZ, though reported to be operational, are not expected to be able to reliably produce Generation III+ RV sets meeting all specifications until the 2012 time frame. . However, the 2010 through 2012 values are listed in the table, above, because they are used to calculate the 2013 to 2030 expected production capacity.

Note 2: Numeric values in blue (gray when printed in black and white) represent production capacity either reported or expected to be operational in 2010 and those in black represent calculated quantities.

Note 3: Current Installed Production Capacity plus one-half of the production capacity reported to be currently under construction

Note 4: Current Installed Production Capacity plus one-half of the production capacity reported to be currently under construction plus 25% of the production capacity planned that would be operational before 2030

Note 5: Projected capacity was approximated based on references 5, 7, 13. However, no specific number of projected RV set production capacity was described in these sources.

The resulting total ultra-large forging capacity from Table 3-1 was used to calculate the cumulative RV set capacity from 2010 through 2030. Figure 3-1 shows the calculated cumulative RV set capacity per year in a bar graph. This supply estimation yields a total of 397 RV sets capable of being supplied by the year 2030.

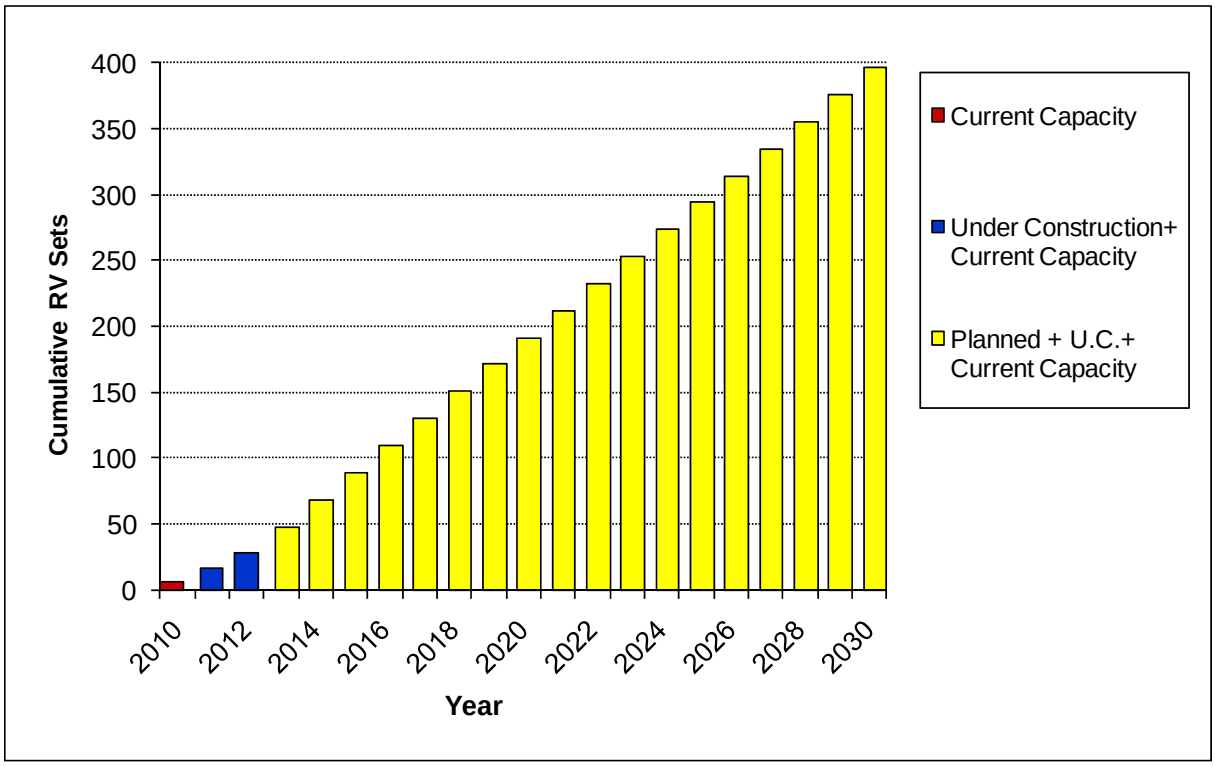

Figure 3-3. Expected RV Set Cumulative Global Production Capacity (2010 - 2030)

3.1.4 Right-size Reactors

"Right-size" reactors are units based on a modular and scalable design of smaller nuclear reactors. These nuclear reactors will, at least conceptually to this point, offer extended refueling cycles, be shipped through commercial transportation methods, and reduce the capital cost and licensing burden otherwise associated with new large nuclear power plants. For example,

mPower from Babcock & Wilcox ("B&W") is a scalable modular design concept that has the capacity to provide 125 MW to 750 MW for a five-year operating cycle without refueling. Other features of the B&W mPower reactor include: integral nuclear system design, passive safety systems, underground containment, a five-year operating cycle between refuelings, a modular design flexible for local needs, and multi-unit flexibility (1 to 10+) plants. The design also features provisions to store spent fuel in on-site storage pools for the anticipated useful life of the reactor (60 years) (ref. 24).

In general, right-size reactors are small in size, with exception of the Pebble Bed Modular Reactor (PBMR) and the Modular High Temperature Gas-cooled Reactor (MHTGR), and do not require ultra-large forgings. Therefore, right-size reactors are considered outside the range of this study. Dimensions for the reactor vessels of a few of the leading right-size reactors are shown in Table 3-2, below.

Table 3-2. Reactor Vessel Dimensions for Right-size and Large Reactors

Reactor Vessel Dimensions	Diameter	Height	Reference
Right-size RVs			
mPower	6ft 7inch (2m)	6 ft 7inch (2m)	24
NuScale Small PWR	9ft 10inch (3m)	59ft (18m)	25
MHTGR (1)	11ft 6 inch (3.5m)	25ft 11inch (7.9m)	26
PBMR (1)	19ft 8 inch (6m)	85ft 4inch (26m)	25
Large RVs			
AP1000	15ft (4.5m)	34ft (10.5m)	22
ABWR	24ft (7.5m)	61ft (21.5m)	23

Note: MHTGR and PBMR are "small" reactors in terms of generation capacity, but are large in size (diameter and height) with a lower power density. These are the exceptions in the right-size reactors group which are typically small in size as well as in generation capacity.

3.1.5 Summary of Results from RV Set Production Capacity Estimates

The status of current and expected supply of large forgings can be summarized as follows:

- All current ultra-large forging capability is outside of the U.S.
- Current major suppliers include JSW from Japan and CFHI and SEC from China.
- Future suppliers will likely include Creusot Forge in France, Dongfang in China, and OMZ in Russia; and might include, Bharat Forge in India, L&T in India, Doosan Heavy Industries in South Korea, and Sheffield Forgemasters in the U.K.
- Estimated international RV set production capacity for the 2010 to 2030 time period:
  - 2010 = 6.5 RV sets/year (Cumulative total of approximately 7)
  - 2011 to 2012 = 10.5 RV sets/year (Cumulative total of approximately 21)

- 2013 to 2030 = 20.5 RV sets/year (Cumulative total of approximately 369)

- The cumulative total world production of RV sets at rated capacity in the 2010 through 2030 span is estimated to be 397 RV sets.

3.2 Assessment of Potential U.S. and International RV Set Demand for the 2010 to 2030 Time Period

3.2.1 Demand Estimate Based on World Nuclear Organization Data

The World Nuclear Organization (WNO) released an outlook report listing the number of Generation III+ reactors in operation, under construction, proposed, and planned globally in 2008 (ref. 17). Major contributing countries include: U.S., Ukraine, Russia, South Korea, Japan, India, and China. This data was used to support a more in-depth understanding of the projected RV set demand from each country. A more detailed profile for each country is found in reference 17. A summary of the WNO data for international and U.S. RV demand is provided in Table 3-3, below.

Table 3-3. Summary of WNO's Estimate of New Generation III+ Power Plants through 2030

Generation III+ Reactor Demand Through 2030, from WNO Data	Generation III+ Reactors in Operation by 2008	Under Construction	Planned or Firmly Proposed
International	3	9	146
U.S.	0	0	31

Assumptions for RV Set Demand Estimate Using WNO Data

In an effort to estimate the RV set demand as accurately as currently possible (based on the WNO data), the following conventions and assumptions were followed:

1. The number of Generation III+ plants currently under construction or planned for future construction were extracted from Reference 17.

2. The "Low" demand scenario represents the Generation III+ reactors currently under construction plus thirty-three (33%) of the reactors planned for future construction.

3. The "Medium" demand scenario represents the Generation III+ reactors for power plants currently reported to be under construction plus all of the plants planned for future construction.

4. The "High" demand scenario assumes significant success from early Nuclear Generation Projects resulting in the construction of a larger number of plants than are currently

planned. The "High" demand scenario escalates the number of reactor vessels called for in the "Medium" scenario by sixty-six percent (66%).

Uncertainties stemming from risks that jeopardize successfully financing, licensing, and constructing new nuclear generation plants are represented by the factors listed in Assumptions 2 and 4, above.

Results from RV Set Demand Estimate Using WNO Data

The results of the demand analysis, based on WNO data (ref. 17), are summarized in Table 3-4, below. These estimates take into account the assumptions listed above and the data provided in Table 3-3.

Table 3-4. RV Set Demand Estimated Based on WNO Data

Projected RV Set Demand for the 2010 to 2030 Time Period (WNO data only includes Gen. III+ Reactors)	**Low** (Under Const.+ % of Planned)	**Medium** (Under Const.+ All Planned)	**High** (Med Case + Escalation)
International	57	155	257
U.S.	10	31	51
Total Demand	**67**	**186**	**308**

3.2.2 Demand Estimate Based on IAEA Data

The International Atomic Energy Association (IAEA) provides estimates for future growth of nuclear power across the world in its annual study, "Energy, Electricity and Nuclear Power Estimates for the Period up to 2030" (ref. 18). The report includes nuclear generation capacity estimates for 2008 and estimated growth rates through 2030. Using this data, an estimate of the projected RV set demand for the U.S. and international markets in the 2010 to 2030 time period was calculated. Three demand scenarios were developed using the low, medium, and high values from the range of growth rates as listed in the IAEA report (ref. 18). The calculation approach and assumptions used are listed below.

Calculation Approach

1. Estimated generation capacity data were extracted from Table 1 "Nuclear power reactors in the world (end of 2008)" and Table 13 "Estimates of average annual growth rates during the period 2008–2030 (%)" from the IAEA Report (ref. 18). Specifically, the nuclear generation capacity for 2008 (World Average 2597.8 TWh and North America 895 TWh) shown in Table 3-5, below, was extracted from Table 1 of the IAEA Report. The annual generation growth rates (World Average 1.5 to 3.6 and North America 0.5 to 1.8) shown in Table 3-5, were extracted from Table 13 of the IAEA Report.

2. The 2008 U.S. nuclear generation capacity, shown in Table 3-5, was calculated by multiplying the North America 2008 generation capacity by a factor of 0.90, which is the ratio of the U.S. to Canadian nuclear capacity (ref. 18, Table 1). Similarly, the U.S. 2030 nuclear capacity estimates for the Low, Medium, and High scenarios were drawn from the North America 2030 capacity estimates through the use of the previously mentioned 0.90 allocation factor.

3. The International RV set demand estimate was calculated by subtracting the projected U.S. RV set demand (described on Item 2, above) from the projected World Average RV set demand, see Table 3-5.

4. Numeric values in blue (gray when printed in black and white) in Table 3-5, below, represent referenced inputs and those in black represent calculated quantities.

5. The current nuclear generation capacity (2010) escalates the generation capacity listed in the report for the end of 2008 by the lowest growth rate from the IAEA report, Table 13 (ref. 18). Annual growth rate (% capacity) for North America is 0.5 percent and the International annual growth rate 1.5 percent. The lowest annual growth rate was selected to escalate nuclear generation from the end of 2008 to 2010 because the increase in nuclear generation capacity in the last year has been almost negligible.

Assumptions for RV Set Demand Estimate Using IAEA Data

The projected RV set demand based on the IAEA data was derived using the following set of assumptions and conventions:

1. The **Low** capacity scenario escalates the current nuclear generation capacity (2010) by the lowest growth rate estimated by the IAEA report, Table 13 (ref. 18). The Low annual growth rate (% capacity) for North America is 0.5% and 1.5% for International capacity.

2. Similarly, the **High** capacity scenario escalates the current nuclear generation capacity (2010) by the largest growth rate estimated by the IAEA report, Table 13 (ref. 18). High annual growth rate (% capacity) for North America is 1.8% and International is 3.6%.

3. The **Medium** capacity scenario escalates the current nuclear generation capacity (2010) by the average of the low and high growth rates. Medium annual growth rate (% capacity) for North America is 1.2% and 2.6 for International.

4. The demand for RV sets by 2030 for each of the three escalated demand scenarios was then calculated by considering the industry average capacity factor for nuclear plants, taken to be 91.5% (ref. 38), and assuming a Generation III+ reactor size equivalent to that of the AP1000 (1,100 MW), the reactor design proposed for the largest segment of the planned projects (ref. 17).

Results from RV Set Demand Estimate Using IAEA Data

The RV set demand analysis was performed by escalating the estimated current nuclear capacity by the “Low”, “Medium”, or “High” growth rates, as discussed in Assumptions 1, 2 and 3,

above. These estimated nuclear generation capacities were then converted into demand for RV sets by 2030 by considering that a majority of the new nuclear generation plants will be sized to generate approximately 1,100 MW (Assumption 4, above). A summary of the demand results from Table 3-5 is shown in Table 3-6.

Table 3-5. IAEA Projected Nuclear Power Generation Growth Rate for the years 2010 to 2030 and Estimated RV Sets Required by 2030 for Low, Medium and High Scenarios

Growth Rate Scenario			Low Growth Rate			Medium Growth Rate			High Growth Rate		
	Nuclear Capacity at end of 2008 (TWh)	Nuclear Capacity in 2010 (TWh)	Annual Growth Rate (%)	Capacity in 2030 (TWh)	Required RV Sets by 2030	Annual Growth Rate (% cap.)	Capacity in 2030 (TWh)	Required RV Sets by 2030	Annual Growth Rate (%)	Capacity in 2030 (TWh)	Required RV Sets by 2030
World Average	**2597.8**	2637	**1.5**	3551	104	2.6	4363	196	**3.6**	5349	308
North America (Canada and U.S.)	**895**	899	**0.5**	994	11	1.2	1131	26	**1.8**	1285	44
International (World - U.S.)	1791	1826		2656	**94**		3344	**172**		4191	**268**
U.S. (N. America x U.S. to Canada capacity ratio)	807	811		896	**10**		1019	**24**		1158	**39**

Note: IAEA's projected nuclear power generation growth is divided by 1,100 MW per plant to yield the "Required RV sets by 2030".

Table 3-6. Total RV Set Demand Estimate Based on IAEA Data for the 2010 to 2030 Time Period

IAEA Nuclear Power Growth Rate Demand Scenario	Low	Med	High
International	94	172	268
U.S.	10	24	39
Total Demand	**104**	**196**	**308**

3.2.3 Cross-check between RV Set Demand Estimates Based on WNO and IAEA Data

Tables 3-4 and 3-6 are presented again in this section as Tables 3-7 and 3-8 for comparison purposes. Table 3-7 shows the 2010 through 2030 RV set demand estimate based on the WNO data and Table 3-8 shows the RV set demand estimate based on IAEA data, for the same time frame. A cross-check of these two data sources is presented in Table 3-9, where the percent deviation of IAEA to WNO demand estimates were calculated. Note that percent deviations were calculated by taking the difference between two equivalent RV set demand estimates (one based on WNO data and the other on IAEA data) and dividing such difference by the RV set demand estimate based on WNO data. For example, in the Low scenario for International RV set demand, the percent difference is calculated as (94 - 57) / 57 = 0.65 or 65%.

The following key points can be drawn from this demand estimates comparison:

1. The Low scenario for international RV set demand does not compare well (65% difference) because WNO uses the actual number of reactors under construction (very few), whereas IAEA escalates current power generation (not an accurate estimation for the current state). Therefore, this is not a valid comparison and the Low international RV set demand based on IAEA data is excluded.

2. The RV set demand projections based on the International Medium and High scenarios in the IAEA and the WNO reports are in general agreement (11% and 4%, respectively). The RV set demand projections based on the IAEA data are slightly higher than the projections based on the WNO data because the IAEA data includes the projected demand for RV sets for all designs of reactors, whereas WNO data only includes RV sets for the Generation III+ designs. The 10% higher IAEA international demand projections can reasonably be attributed to the inclusion of the number of Generation II reactors that are planned for China, India and Russia in the tally.

3. The U.S. Low scenarios from the WNO and IAEA compare very well (0% deviation). The Medium and High U.S. scenarios compare relatively well (23% and 24%, respectively), but projections based on WNO data are higher than those based on IAEA data. This suggests that the annual growth rate used to escalate the U.S. nuclear power generation capacity (0.5%) listed by the IAEA Report (ref. 18) is low, as the projected U.S. RV set demand found in other references identified in the literature search shows higher projected growth rates (ref. 29). An example of an alternate source for U.S. RV set demand projection is described following this numbered list.

4. The cross-check between the WNO and IAEA shows that the RV set demand projections are in general agreement with the exception of the Low international scenario from the IAEA data, which has been excluded.

5. Given the good cross-check between the two RV set demand estimates, the WNO demand estimate was used, since it is specific to Generation III+ reactors.

The U.S. RV set demand was also compared to other recently completed reports discussing future U.S. nuclear plant construction in the time period of interest. Specifically, the America's Energy Future (AEF) study (ref. 29), published by the National Academies Press, projects that the U.S. will construct five (5) new nuclear plants by 2020 and 3 to 5 per year from 2020 to 2030. This corresponds to a U.S. RV set demand estimate ranging from 35 to 55 new Generation III+ plants for the 2010 to 2030 time frame (ref. 29). The projected RV set demand in the AEF study is in general agreement with the WNO projection and further corroborates the projected U.S. RV set demand based on WNO data. Table 3-7 shows the U.S. RV set demand estimate based on WNO data ranging from 31 to 51 RV sets for the Medium and High scenarios. Table 3-8 shows a range of 24 to 39 RV sets for the U.S. Medium and High demand scenarios based on IAEA data. As mentioned in Item 3 above, this U.S. RV set demand comparison implies that the U.S. nuclear generation capacity annual growth rate listed by the IAEA Report (ref. 18) is low (0.5%).

The projected RV set demand values extracted from multiple resources in the literature are in general accord.

Table 3-7. Projected RV Set Demand Based on WNO Data (Repetition of Table 3-4)

Projected RV Set Demand Scenario for the 2010 to 2030 Time Period (WNO data only includes Gen. III+ reactors)	**Low** (Under Const.+ % of Planned)	**Medium** (Under Const.+ All Planned)	**High** (Med. Case + Escalation)
International	57	155	257
U.S.	10	31	51
Total Demand	**67**	**186**	**308**

Table 3-8. RV Set Demand Estimate Based on IAEA Data for the 2010 to 2030 Time Period (Repetition of Table 3-6)

IAEA Nuclear Power Growth Rate Demand Scenario	**Low**	**Medium**	**High**
International	94	172	268
U.S.	10	24	39
Total Demand	**104**	**196**	**308**

Table 3-9. Comparison of Projected RV Set Demand Based on IAEA and WNO Data for the 2010 to 2030 Time Period

IAEA to WNO Projected RV Set Demand Comparison 2010 to 2030 Time Period	Low	Med	High
International	+65%	+11%	+4%
U.S.	0%	-23%	24%
Total Demand	**+55%**	**+5%**	**0%**

3.3 COMPARISON OF THE PROJECTED RV SET SUPPLY AND DEMAND FOR THE 2010 TO 2030 TIME PERIOD

The RV set supply and demand comparison presented in this section is based on the estimated RV set production capacity developed in Section 3.1 (from multiple data sources) and the RV set demand estimate based on the WNO data.

The cumulative estimated RV set demand by 2030 for the three scenarios (Low, Medium, and High), from Table 3-4, is plotted in Figure 3-4 over the estimated cumulative RV set production capacity chart previously shown in Figure 3-1. The values shown in Figure 3-4 correspond to total (U.S. plus International) RV set production capacity and demand estimates. Note that efforts were made to develop a conservative RV set production capacity best estimate, which results in only one production capacity scenario. Figure 3-4 shows that the estimated cumulative RV set world production capacity for the 2010 to 2030 time period is greater than any of the three RV set world demand scenarios (Low, Medium, and High) developed. This result suggests that the projected RV set production capacity from 2010 to 2030 will be sufficient to meet the estimated RV set demand.

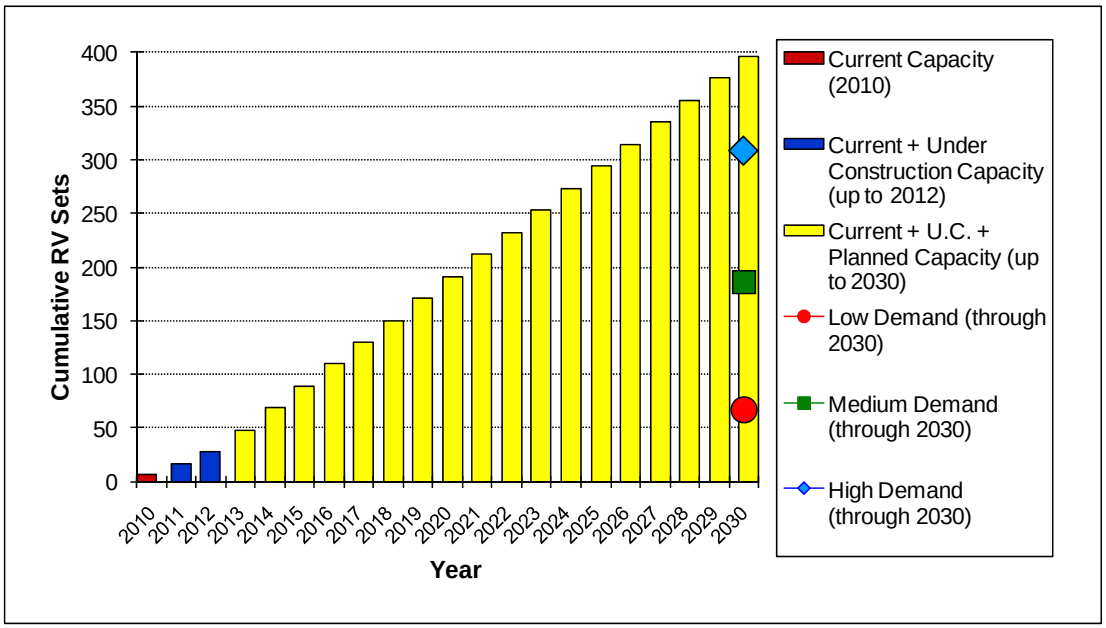

Figure 3-4. Expected RV Set Cumulative Global Production Capacity vs. Expected RV Set Cumulative Global Demand through 2030.

The RV set demand estimate developed in Section 3.2 was calculated through 2030 and does not estimate demand for each intermediate year. For that reason, there is not sufficient data to produce a trend line for RV set demand in Figure 3-4.

Taking a slightly different approach, RV set production capacity and demand was compared on an annual basis for the 2010 to 2030 time period. A weighted average of the annual production capacities from each year was calculated in order to compare RV set supply and demand on an annual basis. The weighted average of the annual international production capacity was calculated as follows (Table 3-10):

Table 3-10. Calculation of Weighted Average for Annual International RV Set Production Capacity

Time Period	Estimated Annual Production Capacity (RV Sets)	Length of Period (Years)	Estimated Production Capacity per Period (RV Sets)	Weighted Average Annual Production Capacity (RV Sets per Year)
2010	6.5	1	6.5	**N/A**
2011-2012	10.5	2	21	**N/A**
2013-2030	20.5	18	369	**N/A**
2010-2030	**N/A**	21	**N/A**	**18.88**

Table 3-11 shows three scenarios (Low, Medium, and High) where the difference between the international supply (weighted average) and each of the three international demand scenarios is compared to the U.S. RV set demand. The results from Table 3-10 show an estimated RV set production capacity surplus for all three scenarios. This result is consistent with the previous RV set supply and demand comparison results.

Table 3-11. Comparison of Weighted Average Annual International RV Set Production Capacity and Average Annual International U.S. RV Set Demand Estimates

	Low Scenario (RV Sets/Year) Note 1	**Medium Scenario (RV Sets/Year)** Note 2	**High Scenario (RV Sets/ Year)** Note 3
International RV Set Production Capacity	18.9	18.9	18.9
International RV Set Demand	2.9	7.7	12.9
International Net available to U.S. (International Capacity – Demand)	16.0	11.1	6.0
U.S. Demand	0.5	1.6	2.5
Surplus International Production Capacity Available to Satisfy U.S. Demand	**15.5**	**9.6**	**3.5**

Note 1: Production capacity under construction or in advanced licensing process plus 33% of planned expansion.
Note 2: Production capacity under construction or in advanced licensing process plus all planned expansion.
Note 3: Medium scenario plus 66% escalation.

4

Potential Costs and Schedule to Re-Establish Domestic Large Forging Capability

4.1 SCRATCH-BUILT LARGE FORGING CAPABILITY

The scope of facilities needed to produce ultra-large forgings for RV sets and the schedule and cost estimates are rough, not detailed, and based on information extracted from references, interviews and site visits.

4.1.1 Scope of Facilities

Existing Ultra-Large Forging Facilities - JSW

Japan Steel Works ("JSW") is the largest and best known supplier in the industry (ref. 1). The Japan Steel Work ("JSW") Muroran plant is located on the island of Hokkaido, Japan. It is currently the only proven source of ASME certified RV sets for Generation III+ designs. As such, it was used to benchmark the scope and size of a national scratch-built ultra-large forging facility.

The JSW Muroran ultra-large forging facility is able to cast and forge nuclear-grade steel ingots of up to 600 tonnes (ref. 7). To make the 600 tonne ingot, high quality steel scrap is melted in an electric arc furnace. The steel is poured into 150 tonne ladles where argon gas is injected, manganese, chromium and nickel are added, and a vacuum is applied to the ladle to eliminate impurities. The mixture is poured into an ingot mold using a vacuum stream degassing technique to form steel ingots 4.2 m. (13.8 ft.) in diameter in the rough shape of a cylinder. The ingots are lifted by overhead crane to the forging mill where they are worked and re-worked in stages by the hydraulic press and loaded into carefully controlled furnaces between stages for heat treatment. The forging process typically takes approximately 3 weeks, after which the forged blank is sent to the machining facilities on site (ref. 27).

The main facilities shown on the JSW web site include:

- 120-tonne electric arc furnace
- 100-tonne electro slag re-melting furnace
- 5-tonne vacuum induction melting furnace
- 14,000-tonne water hydraulic forging press
- 3,000-tonne high speed hydraulic forging press
- Heat treatment furnaces
- Low-frequency quenching equipment
- Machining facility

- Deep water shipping facilities with a 730-tonne wharf crane

The Muroran forging facility site covers 1.1 square kilometers (272 acres) (ref. 28). Its current annual capacity for ultra-large forgings is most commonly quoted as four (4) RV sets per year (refs. 7, 15).

Key Elements of Proposed U.S. Facility

Key elements of the steel making and forging train at the JSW Muroran site were used to characterize the scope used to estimate the cost of building and equipping a scratch-built stand alone ultra-large forging facility in the U.S. A facility complete from "melt shop to machine shop" capable of producing the steel, casting 600 tonne ingots, forging and machining for the production of four RV sets per year would include:

1. A melt shop with a ladle refined, vacuum stream degassing process[(1)]

   - 1 arc furnace, 150 tonne capacity
   - 2 refiners 150 tonnes capacity each (allows 4 teamed heats per ingot)

   Note 1: Vacuum stream degassing is a ladle-to-mold degassing process for removing unwanted dissolved gasses such as hydrogen.

2. Open die forging press shop (forge heating furnaces, manipulators and a press) fully fitted with tools, etc. and large enough to forge the maximum rated ingot

   - Open die forging press rated at 15,000 tonnes

   Note: Forging press operation, as described above, is estimated to have an ultimate capacity to forge approximately six RV sets/year (assuming the associated facilities in the melt shop, heat treating, quenching and machine shop are expanded accordingly).

3. Downstream heat treating furnaces and quenching with a minimum of

   - 3 forging furnaces
   - 3 heat treatment furnaces
   - Quenching tanks

   Note: Three heat treating furnaces are estimated to be adequate for a single RV forging set. To address future production expansion, it is estimated approximately 12 of each type furnace may be required for an annual production capacity of six RV sets per year).

4. Machine shop equipped for rough and finished machining of the forgings prior to shipment to the reactor vessel fabricators. (One reference indicated that rough and finish machining of the forged elements is estimated to take approximately 80,000 – 90,000 hours for each RV set and requires approximately 15 - 18 major machining tools).

5. Industrial buildings with a foot print large enough to accommodate all of the above major production units and all supporting and auxiliary systems estimated at 500,000 – 700,000 sq.ft.

The melt shop/forge shop/heat treatment operation and buildings would have a footprint on the order of 300,000 sq.ft. It is estimated that an additional 200,000 sq.ft. would be required to allow for potential expansion that would accommodate the annual production of up to six (6) RV sets. The machining operation is estimated to require an additional 200,000 sq.ft. of shop space per RV set in production.

The basis for the description and estimated scope of the proposed U.S. forging facility, above, is derived from input gathered during site visits discussed in Section 4.2.2, below, and a follow-up phone interview (ref. 31).

4.1.2 Equipment Scale and Sustained Facility Operations – Technical Considerations

Current steelmaking practice in the U.S. is to produce high quality steel ingots in either a special "ingot-only" facility (such as at the Ellwood City Forge facility) or as a special line in a larger facility which produces both ingots and other steel products like rails or structural beams (such as at the ArcelorMittal Steelton facility).

For an "ingot-only" facility, it is not economically practical to significantly expand the scale of the production to that necessary for ultra-large forgings. For example, the Ellwood City Forge is one of the largest "ingot-only" facilities in the U.S., and the largest ingot that the facility can pour is limited to approximately 65 tonnes. Expansion beyond this size ingot would essentially require an entirely new facility to be built that has nearly ten times the capacity for every element of the steel making and forging train; from furnaces, to forges and machine shop, including all the ancillary equipment and processes. Maintaining the steel quality and proper operation of the facility is sensitive to excessive thermal cycling. Thermal cycling quickly degrades the refractory linings of the melt furnaces and can introduce impurities into the steel. Maintaining the steel production level to limit thermal cycling would require a massive increase in steel throughput to approximately ten times the present capacity at the Ellwood City Forge. The investment in the capital equipment necessary to essentially increase the capacity of the facility by a factor of ten could not be economically justified without a guaranteed and sustained market.

For facilities where ingot production is a separate line in the steelmaking process, the sizing of the steel making process is dictated by the mechanics of pouring a 600 tonne ingot and the quality of steel required. Current steelmaking practice for large ingots in the U.S. is to "piggy back" ingot production with steel production that is channeled to other use. There currently appears to be margin in U.S. steel mill capacity to produce larger ingots, although the largest ingot that can be cast is approximately 270 tonnes. The ingot production equipment and infrastructure would need to be replaced and increased by approximately 200 to 300 percent in order to produce ultra-large forging ingots.

There are a number of technical issues that impact steelmaking for high quality nuclear grade forgings. A few of the key issues are discussed below.

Steel making ladles must be kept hot and in service. The electric arc furnace and all vessels that hold the molten steel during the steel making and casting process are refractory lined. Cycling the process (allowing the equipment to cool in between steel making and casting runs) degrades

the refractory linings and can allow “leakage” of impurities into the steel. Consequently, the melt shop cannot be thermally cycled in between casting sessions and still maintain the high quality necessary to forge the RV sets.

The largest U.S. electric arc furnace can melt approximately 135 tonnes (150 tons) of scrap steel in approximately 50 minutes. The largest refiner ladles currently in service in the U.S. are also limited to 135 tonnes each. To pour a 600 tonne ingot, the electric arc furnace would be required to melt five (5) loads of steel (“heats”) in quick succession, timed to allow all five heats to be refined and then poured into the transfer ladle that feeds the ingot mold within a limited time.

The process for making a 600 tonne ingot would likely be based on the above process approach. There are three time-limiting issues for the duration of a 600 tonne ingot pouring process, and all are quality related:

- The refiner ladle residence time – too long, and impurities can migrate from the ladle refractory into the steel
- Continuous charging of the 600 tonne ingot – the multiple pours from the refiner ladles into the mold must be continuous during the entire duration of the pour to prevent discontinuities in the casting
- The molten steel must not be allowed to fall below a minimum level in the transfer ladle (positioned at the top of the ingot mold) in order to maintain the vacuum seal between the transfer ladle and the mold

The ingot mold is held under a high vacuum (less than 1 torr) while the molten steel is being poured into the ingot mold. This is a feature of the ladle to mold degassing process, which removes hydrogen and other unwanted dissolved gasses from the molten steel as it flows into the ingot mold. This process is known as “vacuum stream degassing”.

4.1.3 Cost Estimate

The first order capital cost estimate for a 600 tonne class stand-alone scratch-built integrated steel making, ingot casting, forging and machining facility is:

$1.5 - $2.5 billion

This estimated cost is exclusive of any “outside-the-fence” infrastructure that may be required.

The ongoing carrying cost to sustain operations could be significant should the market for RV sets prove to be insufficient to support the cost of operation. A rough estimate of potential annual carrying costs that might be needed to supplement the net revenue of a domestic production facility is presented in Table 4-3, below. The rudimentary financial model provides only a rough indication for one potential commercial scenario out of the many possible variations and assumptions, but the result is useful for context in the discussion of the magnitude of ongoing government support and financial assistance that might be required.

The model is based on an assumed overnight capital cost of $2 billion and a series of assumptions for the annual debt service and other non-variable costs. The environmental studies,

including the Environmental Assessment ("EA") and Environmental Impact Statement ("EIS"), are estimated to take at least a year to complete and may cost several million dollars. The cost of the plant site, including any pre-construction preparation or possible remediation, is not considered. The model results indicate an estimated fixed annual carrying cost on the order of $300 million/year. The annual net revenue is based on an assumed annual RV set production rate (maximum capacity of 4 RV sets/year), an RV set market value of $350 million per set, and an assumed correspondingly proportional production cost for each RV set. The market value is at the top end of the range of values found in references identified in the literature search (refs. 27, 36, 37).

The results, presented in Table 4.1, below, indicate that the forging facility annual operating deficit could be on the order of $300 million of fixed carrying costs in the event of a "dry year" with no RV set sales. The model shows the deficit would be $100 million/year if the facility is operated at a fifty percent (50%) production capacity (2 RV sets per year) and the net annual revenue may turn positive as the production rate is increased up to the maximum of four (4) RV sets per year.

Any deficit resulting from the production of RV sets would have to either be made up in margin on the sale of other forgings produced at the facility not related to RV set production (not considered practical in a competitive world market), or through some form of subsidy.

Table 4-1. Rough Estimate of Potential Annual Government Carrying Cost

Assumption	Value	Comments
Overnight Capital Cost Includes Environmental Studies (EA/EIS) and Site Permitting	**($2.0 billion)**	Stand alone scratch-built greenfield construction (midrange of cost estimates) Environmental Studies est. at $2 million
Interest During Construction over 5 year construction period	**($500 million)**	IDC assumed to be 8% of Overnight Capital Cost per year during construction period
Total Capital Cost	**$2.5 billion**	
Annual debt carrying cost	**($250 million/year)**	10% of capital
Site personnel (cost/year)	**($30 million/year)**	Assuming approx 200 employees assigned to large forging operations @ $150,000/year fully burdened
Other potential fixed costs (taxes, insurance, etc)	**($20 million/year)**	This is likely a conservative estimate
Total fixed annual carrying cost	**($300 million/year)**	
Annual plant capacity	4 RV sets/year	Maximum capacity of facility
Total US RV set market	~50 RV sets	Estimated U.S. nuclear power plant expansion over 2010 - 2030
Estimated US RV set market share	~50% (25 RV sets)	Some portion of RV sets for the U.S market already on deposit with JSW, sourced from AREVA's Creusot Forge or under agreement with other foreign sources
Market value of complete RV set	$350 million/RV set	Estimates range from $150 – $350 million (2009 dollars) per RV set
Variable cost to manufacture each RV set	**($250 million/RV set)**	Estimated at ~70% of market value. Capital recovery (debt service and profit) comprise the 30% balance
Estimated "margin" per RV set (market value minus variable production cost)	**$100 million/RV set**	
Estimated total annual carrying cost @ 0 RV sets/year	**($300 million/year)**	Equal to annual fixed operating costs. Would be partially offset by other forgings produced in facility
Estimated total annual carrying cost @ 2 RV sets/year (~50% U.S. market capture)	**($100 million/year)**	(Total annual gross margin) – (Annual debt carrying cost + personnel costs). This is the estimated likely annual production rate.
Estimated total annual net margin cost @ 4 RV (full production capacity)	**$100 million/year**	(Total annual gross margin) – (Annual debt carrying cost + personnel costs)

4.1.4 Schedule Estimate

An accelerated schedule to build a complete stand alone scratch-built ultra-large forging facility, excluding supporting infrastructure, is estimated to require five to seven (5 to 7) years. The site visits and phone interviews provided the input for estimating the time needed for engineering, procurement and construction of the facility. The lead time for procurement of the major forging equipment was identified as the critical path.

A typical time line for the engineering, procurement, construction and start-up of a large basic manufacturing facility is illustrated in Figure 4.1, below.

Typical Timeline	Time (months	
Large Manufacturing Plant Engineering & Construction	Start	Finish
Engineering	0	12
Project kick-off	0	
Project conceptual engineering	0	3
Preliminary engineering and specifications	3	6
Detailed Engineering/Specifications package development	6	12
Environmental	6	36
Project EA (or FONSI) and EIS	6	18
Environmental/site permits & licenses	18	36
Procurement, construction & start-up	12	66
Major long lead (3 - 4 years) equipment procurement	12	18
Construction	18	60
Plant Operations Start-up	60	66
Commercial Operation Date (COD)	66	
Training, process validation & ramp-up to full production	60	72
Personnel Training and Qualification	60	69
Process quality validation and ramp up to full production	66	72

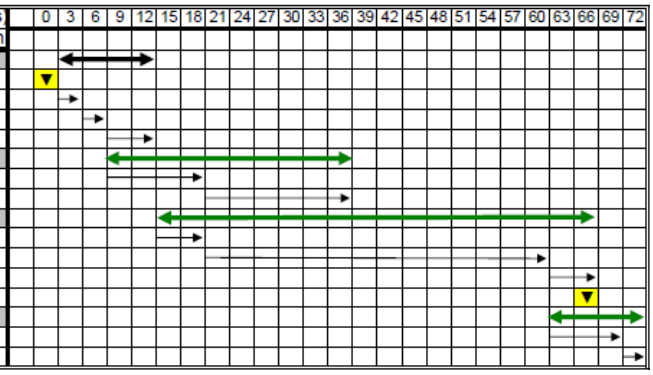

Figure 4-1 Typical Timeline - Large Manufacturing Plant Engineering and Construction

4.2 UPGRADE OF EXISTING U.S. FORGING FACILITIES

As there are no ultra-large forging facilities in North America, the largest of the remaining domestic steel making and forging facilities that are still in operation were targeted as potential candidate sites that might be upgraded to produce forgings for RV sets. Upgrading existing U.S. forging facilities that have the supporting infrastructure already in place would typically have an advantage in cost and schedule over greenfield sites.

4.2.1 Potential U.S. Sites

Identification of Potential Plant Sites

The larger domestic forging facilities still in operation were identified in the literature search. The Forging Industry Association was contacted to supplement the literature search for candidate sites and confirmed three candidate forging operations:

- Lehigh Heavy Forge, located in Bethlehem, PA
- Ellwood City Forge, located in New Castle, PA
- Jorgensen Forge, located in Tukwila, WA

A literature search was conducted to research these candidate facilities and identify any other any other large forging facilities still in operation. No other domestic large forging facilities were identified.

The Ellwood City Forge and the Jorgensen Forge are both integrated forging lines. Both of these candidates are complete “melt shop to machine shop” with steel making, ingot casting, forging and machining located on-site. While the Ellwood City Forge has no direct access to heavy waterborne transport, the Jorgensen Forge is located on the Duwamish Waterway.

The Lehigh Heavy Forge is not an integrated forging operation in that it no longer has steel making capability on-site. All the steel ingots for the forge are outsourced and are supplied by the ArcelorMittal Steelton facility located in Steelton, PA. These ingots are shipped hot in insulated rail cars approximately 130 kilometers (80 miles) as needed. Since the Lehigh Heavy Forge cannot operate independently, the combination of the Lehigh Heavy Forge, the ArcelorMittal Steelton steel facility and the rail link between the two sites is considered as one forging operation. Of the four sites that were assessed, only the Jorgensen Forge has direct access to heavy waterborne transportation. Table 4-1, below, lists these four sites and shows the maximum ingot size that each site can cast and/or forge.

Table 4-2. Characteristics of U.S. Sites Assessed as Candidates for Upgrade

Facility	Activity On-Site	Large Forging Press Capacity	Max Ingot Size	Direct Access to Waterborne Transport
Jorgensen Forge	Integrated Forging Line Steel Making, Ingot Casting, Forging, Machining	Open die forging presses with capacities up to 4,540 tonnes (5,000 tons)	64 tonnes (estimated)	Located on the Duwamish waterway
Ellwood City Forge	Integrated Forging Line Steel Making, Ingot Casting, Forging, Machining	Open die forging presses with capacities up to 4,540 tonnes (5,000 tons)	64 tonnes (67 tons)	None
Lehigh Heavy Forge	Forging, Machining	Open Die Forge press rated at 9,070 tonnes (10,000 tons)	272 tonnes (300 tons)	None
ArcelorMittal Steelton	Steel Making	Not Applicable	Ingot casting only 130 in. (3.3 m) in diameter 278 tonnes (307 tons)	None

4.2.2 Site Visits

Phone interviews with the site management were conducted and site visits were arranged with the Ellwood City Forge, the ArcelorMittal Steelton and Lehigh Heavy Forge facilities. A site visit to the Jorgensen Forge was not conducted. The ingot making and forging capabilities of the Jorgensen Forge and the Ellwood City Forge are considered to be comparable and Ellwood City was chosen for a site visit as representative of both sites.

Ellwood City Forge Site Visit

The Ellwood City Forge, located in New Castle, PA, was visited on November 16th, 2009. The Ellwood City Forge has an integrated forging train with an all-scrap steel making melt shop, and

can cast and forge ingots weighing up to 64 tonnes (70 tons). There is also a machine shop on-site. There is no direct access to heavy waterborne transport at the Ellwood City Forge site.

ArcelorMittal Steelton & Lehigh Heavy Forging Site Visits

The largest forging capability remaining in operation in the U.S. is the combination of two separate sites that are linked by rail: the ArcelorMittal Steelton steel mill (Steelton) located in Steelton, PA, and the Lehigh Heavy Forge (LHF), located in Bethlehem, PA. LHF no longer has steel making or ingot casting facilities in operation on-site and relies exclusively on the ArcelorMittal Steelton complex (Steelton) to supply their large ingots. The ingots are shipped hot with a stabilized temperature near 650ºC (1200ºF) in insulated rail cars from Steelton to the LHF site, a distance of approximately 130 km (80 miles). Neither the Steelton nor LHF sites have direct access to docking and water borne shipping facilities.

ArcelorMittal Steelton

Like the JSW Muroran facilities, Steelton is an "all scrap" steel making facility and has a vacuum stream degassing casting process with ingot teaming capability. The Steelton facility melt shop configuration is currently limited to a maximum ingot weight of approximately 278 tonnes (613,000 lbs).

Lehigh Heavy Forge

The Lehigh Heavy Forge is reportedly capable of working steel ingots as large as 272 tonnes (600,000 lbs). The Lehigh open die forging press is rated at 9,070 tonnes (10,000 tons). The heat treating furnaces, quenching pits and machining facilities are sized accordingly. The main overhead crane is rated at 272 tonnes (300 tons) and is adequate for the largest ingots that are currently shipped from Steelton. If necessary, two overhead cranes can be used together for a total lift of approximately 410 tonnes (450 tons). The physical clearances, dimensions and capacities of the supporting major equipment are proportionally sized. LHF is serviced by rail transport and has no direct access to heavy barge or deepwater transport for either receiving steel ingots or shipping the forged blanks that are produced. The LHF facility is the largest capacity open die forge in operation in North America and no other U.S. forge is near its capacity.

4.2.3 Site Upgrades for Each Facility and Feasibility Assessment

Each location was evaluated for suitability including access to transportation and infrastructure. Any major limitations inherent in each location and factors that would impact the cost of construction and future viability were reviewed for each site.

Ellwood City Forge and Jorgensen Forge

The largest ingot that these two facilities can cast is limited to approximately 64 tonnes (70 tons), an order of magnitude less than would be required for the largest forgings required for the Generation III+ RV sets. The forging and machining facilities are similarly limited. The existing facilities at both the Ellwood City Forge and the Jorgensen Forge cannot be upgraded to produce ultra-large forgings and would have to be essentially replaced with a new steel making and forging line equipped as described in Section 4.1.1, above.

ArcelorMittal Steelton/Lehigh Heavy Forge

The ArcelorMittal Steelton facility, the connecting railway and the Lehigh Heavy Forge are considered as one complete forging train.

Steelton

The existing DC arc furnace at the Steelton facility is rated at 135 tonnes (150 tons) and may be adequately sized to be used in a 600 tonne ingot casting operation. Additional equipment would have to installed, upgraded or reconfigured including:

- Additional 135 tonne holding station(s) and degasser(s)
- Upgraded and dedicated steam supply to augment the existing vacuum system
- Larger overhead crane and loading facilities rated in excess of 600 tonnes lift
- Extension of building that houses the ingot casting production line

The upgrades to the steelmaking and ingot casting facilities at Steelton would be extensive and require a major engineering effort. Retrofitting the additional major steelmaking and ingot casting equipment would require extensive modifications to the facility and all ingot handling and heavy lift cranes would have to be replaced.

Lehigh Heavy Forge

Nearly all the equipment at the Lehigh Heavy forge would have to be replaced for the facility to be able to forge and machine ultra-large forgings including:

- Larger overhead crane with sufficient lift height and rating in excess of 600 tonnes
- Larger manipulator rated in excess of 600 tonnes
- Open die forging press rated at 14,000 to 15,000 tonnes with the physical dimensions and clearances to forge 600 tonne ingots
- Potential large ring roller sized at 7 meters diameter x 4 meters high
- Full set of forging fixtures and tools
- Larger heat treating ovens with the physical dimensions and clearance required to accept 600 tonne ingots
- Larger quenching facilities with the physical dimensions and clearance required to accept 600 tonne ingots
- Larger machine shop and key machine tools with ratings, physical dimensions and clearances required to accept 600 tonne ingots
- Buildings that allow vertical clearance for higher crane lift

Rail Transport

Both the Steelton and the LHF sites have no direct access to heavy barge or deep water transport and are consequently limited to the maximum weights and dimensions permitted by rail transport. It is not clear that the rail way linking Steelton and the Lehigh Heavy

Forge could accommodate the transport of 600 tonne ingots. The capacity of the insulated rail cars currently used to transport the ingots are limited to approximately 320 tonnes; approximately half of that needed to transport 600 tonne ingots. The dimensions of the largest forgings may also exceed the maximums that can be accommodated by rail transport. As such, this is a major unresolved concern.

4.2.4 Conclusions on Feasibility of Upgrading Forging Sites

The lack of direct access to heavy waterborne transport is a major disadvantage that severely affects any practical upgrade or expansion of the Lehigh Heavy Forge and Steelton facilities. The same conclusion applies to the Ellwood City Forge. Based on the assessment, it would not be feasible to make the upgrades to the existing facilities at the ArcelorMittal Steelton and Lehigh Heavy Forge sites that would be required to cast and forge 600 tonne ultra-large ingots, machine the forged blanks and ship the Generation III+ RV sets.

4.2.5 Potential Other U.S. Sites

Other sites were considered for establishing an ultra-large forging. Locating the site on a navigable waterway with direct access to heavy waterborne transport would be a prime consideration. Co-locating with either an existing steel mill or a Generation III+ reactor vessel manufacturing facility would also be advantageous.

There are inherent advantages to co-locating a new ultra-large forging facility adjacent to or near an existing steel mill. The logistics for transporting the 600 tonne ingots from the melt shop to the forging and machining facilities would be simplified. An additional benefit would be the pre-existing infrastructure and trained labor pool already in place and presumably available to support the new facilities. These factors could ultimately reduce the scope and the estimated $1.5 to $2.5 billion cost of constructing and equipping a new ultra-large forging complex and could significantly enhance the long term viability of the project. Building a new ultra-large forging complex adjacent to melt shop facility satisfies the high level requirements, as identified to this point, to be conceptually feasible and warrants further investigation as a lower cost option compared to a stand alone forging facility.

Locating the forging complex at a site adjacent to or near an existing reactor vessel manufacturing facility would simplify logistics for transporting the RV sets from the forging complex and potentially provide other advantages over a stand alone site. This would potentially reduce the scope and the estimated $1.5 to $2.5 billion cost of constructing and equipping a new ultra-large forging complex by an estimated $400 million (ref. 31) and potentially reduces overall project technical and completion risk. However, a steel melt shop capability would have to be identified to support this endeavor. Building a new ultra-large forging complex adjacent to a reactor vessel manufacturing facility satisfies the high level requirements, as identified to this point, to be conceptually feasible and warrants further investigation as an option.

4.3 SUMMARY OF MAJOR POINTS

- A new stand-alone scratch built ultra-large forging facility at a greenfield site with a capacity of four (4) RV sets per year is estimated to cost $1.5 to $2.5 billion and take five to seven (5 to 7) years to construct.

- The existing domestic large forging facilities are not capable of producing ultra-large forgings and cannot be feasibly upgraded to cast, forge and machine ultra-large forgings.

- Direct access to heavy waterborne transport is a prime consideration for choosing a site to establish domestic production of ultra-large forgings.

- The steel making "melt shop" large enough to support the casting of ultra-large (600 tonne) ingots would typically have an annual capacity of 1 million tonnes per year in order to sustain the production rate that would support the technical and quality factors associated with ultra-large high-quality steel ingot casting. This annual steel mill capacity is approximately 900,000 tonnes of steel in excess of the total annual capacity necessary to support the production of ultra-large forgings.

- Locating at a brownfield site adjacent to or near an existing large steel making complex would provide a way to utilize the excess steel capacity and reduce the total project cost.

- Locating the forging complex at a site adjacent to or near an existing reactor vessel manufacturing facility would simplify logistics for transporting the ultra-large forgings and would potentially reduce the cost by $400 million by using the machine shop capability already in place.

5
First Order Cost/Benefit Analysis

5.1 COSTS

5.1.1 First Order Cost Estimate

The first order cost estimate, as described in Section 4, for constructing and equipping a domestic greenfield, stand alone, scratch-built ultra-large steel ingot making and forging facility capable of producing Generation III+ RV sets is roughly $1.5 to $2.5 billion. The schedule for construction of this facility, capable of producing 4 RV sets per year, is estimated to be approximately five to seven years.

As discussed in Section 4.2.5, above, some savings may be realized if the facility can be sited adjacent to an existing large steel production facility or reactor vessel assembling and finishing facility. Additional savings may be realized from taking advantage of the existing supporting infrastructure already in place. The magnitude of these potential savings is difficult to assess at this rough level of analysis but may be on the order of several hundred million dollars, thereby reducing the estimate of the total overnight capital cost to between and $1 and $2 billion.

5.1.2 Conclusions on Cost

The cost estimate, while approximate, is still useful. At this conceptual level of assessment, the estimates provide the scale of investment required. Even taking credit for any potential savings from co-locating the ultra-large forging facility adjacent to an existing large steel production facility or a reactor vessel assembling and finishing facility, the estimated cost of establishing a domestic capability represents a very large capital investment. The relatively long construction and start-up schedule presents additional challenges that impact schedule risk and financing costs.

5.2 BENEFITS

The direct commercial benefit from the production of RV sets depends on the return on the total investment from the net revenues generated. The rudimentary financial model outlined in Section 4.1.3 indicates that, even with the estimated market value of the RV sets at the upper end of the range identified through the literature search, the net revenues could be marginal.

5.2.1 Need for U.S. Capacity to Meet Demand (None Needed)

The results of the research and data analysis detailed in Chapter 3 show a projected surplus of overseas RV set production capacity in excess of that required to meet off-shore demand for

Generation III+ RV sets. This projected surplus appears to be adequate to support the U.S. demands for the "Low", "Medium" and "High" scenarios. These three scenarios correspond to the projected expansion of the U.S. nuclear power generation fleet by ten (10), thirty-one (31) and fifty-one (51) new plants over the twenty years from 2010 to 2030. Consequently, little or no economic support or justification to build and operate an ultra-large forging facility can be based solely on the domestic market for RV sets.

A U.S. ultra-large forging facility would be capable of making large forgings for other domestic and foreign markets including large fossil fueled power plants and petrochemical plants, but international suppliers have that capability as well and there is apparently insufficient demand for very large forgings in the U.S. domestic market alone to support a U.S. facility.

Overall we conclude there is no market incentive to establish an ultra-large forging capability in the U.S.

5.2.2 Ancillary Benefits

There are ancillary benefits that would be expected from establishing and maintaining an ultra-large forging capability in the U.S.

Potential benefits that could be derived from a domestic ultra-large forging capacity are:

- Independence of foreign suppliers – this benefit is recognized by the U.S. DOD at the current scale of the facilities of Lehigh Heavy Forge/ArcelorMittal Steelton for ongoing vital defense needs such as aircraft carrier and submarine reactor vessels and propulsion shafting for the U.S. Navy.

- U.S. jobs and dollars stay home – This potential benefit would be somewhat mitigated if Areva intends to source at least some of the smaller forgings in the U.S. to supply their reactor vessel assembly and finishing facilities currently under construction at Newport News, VA instead of their Creusot Forge in France.

- Local/State tax base boost – Again, this would be partially offset if Areva sourced some of their smaller forgings for their reactor vessels in the U.S.

- Maintain and expand crucial industrial base and specialized skills – While the specialized skills and capabilities necessary to cast large ingots still survive in the U.S., they are in danger of being lost entirely, especially if the remaining domestic large ingot casting and forging operations like Steelton/Lehigh Heavy Forge shut down.

All of these potential benefits provide a basis for paying premiums beyond market prices, and should be valued by policy makers; however, the significant difference between apparent U.S. demand and world-wide supply may well be the dominant factor.

5.3 TRADE-OFF (NOT FAVORABLE)

The current business conditions and projected market risk do not support a viable business model for establishing an ultra-large forging capability in the U.S. The estimated costs far outweigh the projected benefits in a market-based economic analysis:

- Estimated costs are high in relation to the likely market capture and the projected return on investment appears to fall well below the commercial threshold needed to support investment.
- There is a long delay from project launch until commercial operation and generating any cash flow.
- Project risks are significant and include the long construction and start-up of a very complex facility and the transfer of a technically complex, multifaceted and largely experience-based process capability.

Government funding is possible if policy issues are warranted to justify the effort. However, the level of government support required would be extensive and subject to risk:

- Long term support and funding of large capital investment ($1.5 - $2.5 billion over five to seven years).
- Risk mitigation with grants, loan guarantees, regulatory delay, insurance, etc.
- Guaranteed ongoing support of market to assure sufficient demand (estimated to be as much as $100 million per year).

The cost and benefit trade-off is not favorable and does not support pursuing a domestic U.S. ultra-large forging capability.

5.4 ALTERNATIVE APPROACHES

Alternatives to a full-scope U.S. ultra-large forging capability may be viable. Detailed evaluation of these alternatives is outside the scope of this report. A number of alternate approaches exist, including:

1. Evaluation of the siting and sizing options for a new facility to identify a potential "Bargain" - The approach to explore would be to develop a more complete plant design and layout and conduct a more extensive search for locations and existing facilities that could allow achieving a domestic ultra-large forging capability at a much lower cost and/or on a shorter schedule.
2. Build a smaller facility – This would reduce cost, perhaps allow more location choices, and would fit in a niche market such as smaller "right-sized" reactors. The approach to explore would be to look for break-points in the cost of a smaller, less capable facility sited in the U.S. and evaluate the trade-offs between the forging capability, capital cost,

strategic benefits and product market demand profile. Also consider promoting two such facilities to foster competition and assure continued incentive to maintain high quality, and achieve superior products and process innovation. This approach may be politically attractive since it sponsors development in more than one location, especially if extensive government funding is needed.

3. Build a special purpose facility - Focus on another specialty market such as forging stainless steel parts for nuclear plants or other special purpose needs, e.g., high strength or high temperature alloys. Approach as in preceding item; look for special products and sizes that would take advantage of break points with respect to costs and benefits.

4. Form a consortium - Facilitate and sponsor the formation of a consortium of companies in the steel making and forging industries large enough to reach the threshold required to undertake building and sustaining an ultra-large forging complex. While there is interest within the industry in undertaking this project, no single steel making or forging company would appear to have the commercial means and does not anticipate a large enough market share of the projected RV set domestic and international market to unilaterally finance and accept the risk.

For an option with a very long term focus, DOE could explore alternatives to steel for vessels. Concrete has been used for reactor vessels and has been considered for some future reactors like high temperature gas-cooled reactors (HTGRs) and for very large reactors that are even bigger than those in the Generation III+ nuclear power plant designs. Another alternative would be to explore the feasibility of composite, non-metallic vessels, perhaps with auto-frottage liners.

Coordinating federal, state and local government industrial support programs, such as grants, loans, loan guarantees, tax breaks, investment and production tax credits, favorable siting, etc., would enhance any of the above listed alternative approaches. Existing federal programs administered by various agencies including the Department of Energy and the Department of Defense, might be bundled into an interlocking package that would enhance the commercial feasibility and sustainability of any of the above listed alternative approaches for establishing a suitable domestic large forging capability.

An example would be coordinating grants from the Defense Production Act (DPA), "Title III" Program with other governmental programs. The mission of the DPA Title III Program is to "create assured, affordable, and commercially viable production capabilities and capacities for items essential for national defense." It has already been applied to the forging industry in support of the production of forgings for naval reactor components. Coordinating with other federal, state and local programs, could play a part supporting an ultra-large forging capability by supporting defense-related forging production at the same facility.

5.5 RECOMMENDATIONS

1. The pursuit of establishing a new domestic stand-alone 600 tonne ultra-large forging capability is not recommended.

2. Consider developing other alternatives:

   - Expand and improve domestic large forging capability to the maximum extent possible within the limits of the existing equipment and facilities. The existing facilities have the capability to produce a significant portion of the forgings required for the reactor vessels of the more compact Generation III+ designs.

   - Expand U.S. nuclear power design focus to include new designs and encourage designs featuring reactor vessels that use large forgings within current U.S. manufacturing limitations.

3. Potential actions by DOE or DOE-NE:

   - Develop preliminary design and specifications for an optimally sized domestic forging capability for the most favorable correlation with the Generation III+ RV set requirements and commercial viability.

     The initial effort could take the form of a DOE sponsored follow-on study to examine the capability of the existing domestic forges to support the spectrum of smaller reactor designs. The scope of such a study would include a comparison of the size of the forgings required to fabricate the various right size reactor designs now in development and the current or potentially achievable capability of the existing U.S. forging facilities to produce those forgings.

   - Explore how to integrate or "piggy-back" an upgraded forging facility with existing steel making and manufacturing lines to best utilize the surplus steel making capacity of the forging melt shop to enhance commercial viability.

   - Explore how to best integrate existing government nuclear industry support programs and initiatives, possibly structuring a package that would support a viable business model, mitigate commercial and project risk, and facilitate the upgrade of the existing U.S. forging capability.

6 References

1. Alpern, Peter, "U.S. Cedes Capability for Largest Nuclear Forgings," *Industry Week*, June 24, 2009, <http://www.industryweek.com/articles/u-s-_cedes_capability_for_largest_nuclear_forgings_19453.aspx?SectionID=3>, accessed on October 12, 2009.

2. Spring, Nancy, "Not Taking Heavy Components Lightly," *Nuclear Power International*, September 2009, <http://pepei.pennnet.com/articles/article_display.cfm?ARTICLE_ID=368709&p=140&section=ARTCL&subsection=none&c=none&page=1>, accessed on December 17, 2009.

3. "Indian Manufacturer Looks Outwards," *World Nuclear News*, July 16, 2008, <http://www.world-nuclear-news.org/C_Indian_manufacturer_looks_outwards_1607083.html>, accessed on October 26, 2009.

4. "Nuclear Plans Forge Ahead," *World Nuclear News*, June 16, 2009, <http://www.world-nuclear-news.org/newsarticle.aspx?id=25431&terms=nuclear+plans+forge+ahead>, accessed on October 26, 2009.

5. "Doosan Delivers to China," *World Nuclear News*, February 9, 2009, <http://www.world-nuclear-news.org/newsarticle.aspx?id=24621&terms=doosan+delivers+to+china>, accessed on October 26, 2009.

6. "Japan Steel Works to Triple Capacity," *World Nuclear News*, December 3, 2008, <http://www.world-nuclear-news.org/newsarticle.aspx?id=23958&terms=japan+steel+works+to+triple+capacity>, accessed on October 26, 2009.

7. World Nuclear Association, *Heavy Manufacturing of Power Plants*, October 2009, <http://www.world-nuclear.org/info/inf122_heavy_manufacturing_of_power_plants.html>, accessed on October 27, 2009.

8. "Japan Steel Amps Up Nuclear Production in China," *Castings and Forgings News*, September 16, 2009, <http://www.castings-forgings-news.com/news/newsdetail.aspx?NewsID=21356>, accessed on October 26, 2009.

9. "Nuclear Equipment Forging Unit," *Castings and Forgings News*, September 15, 2009, <http://www.castings-forgings-news.com/news/newsdetail.aspx?NewsID=21353>, accessed on October 26, 2009.

10. “Forgemasters Ships to China,” *Castings and Forgings News*, August 20, 2009, <http://www.castings-forgings-news.com/news/newsdetail.aspx?NewsID=20937>, accessed on October 26, 2009.

11. “BHEL to Tie Up With Sheffield Forgemasters,” *Castings and Forgings News*, April 3, 2009, <http://www.castings-forgings-news.com/news/newsdetail.aspx?NewsID=18741>, accessed on October 26, 2009.

12. “Bharat Forge Signs MOU With Areva,” *Castings and Forgings News*, February 13, 2009, <http://www.castings-forgings-news.com/news/newsdetail.aspx?NewsID=17946>, accessed on October 26, 2009.

13. “Doosan Delivers to China,” *Castings and Forgings News*, February 13, 2009, <http://www.castings-forgings-news.com/news/newsdetail.aspx?NewsID=17941>, accessed on October 26, 2009.

14. “CFHI Casting and Forging Base,” *Castings and Forgings News*, February 13, 2009, <http://www.castings-forgings-news.com/news/newsdetail.aspx?NewsID=17940>, accessed on October 26, 2009.

15. Marketfriendly, Inc., *Molybdenum and Nuclear Power – Part II*, August 2008, <http://www.sprottmoly.com/pdf/NuclearMoly_2_.pdf >, accessed on October 26, 2009.

16. NRC, *Expected New Nuclear Power Plant Applications*, September 28, 2009, <http://www.nrc.gov/reactors/new-reactors/new-licensing-files/expected-new-rx-applications.pdf>, accessed on December 4, 2009.

17. World Nuclear Association, *WNA Nuclear Century Outlook Data*, [2009], <http://www.world-nuclear.org/outlook/nuclear_century_outlook.html>, October 26, 2009.

18. Reference Data Series No. 1, *Energy, Electricity and Nuclear Power Estimates for the Period up to 2030*, 2009 Edition, IAEA

19. “More Forgings for USEPR,” *World Nuclear News*, July 25, 2007, < http://www.world-nuclear-news.org/newsarticle.aspx?id=13766&LangType=2057>, accessed on December 19, 2009.

20. U.S. Department of Energy, *Supplement to Nuclear Power Deployment Scorecard*, October 15, 2009, <http://www.nuclear.gov/np2010/neScorecard/pdfFiles/scorecard_suppl_2009_10.pdf >, December 11, 2009.

21. OMZ Special Steels, *OMZ Brochure*, [2009], <http://www.omz.ru/media/omz-businesses/eng/complex/specstal/profile/forged-articles2.pdf>, accessed on December 17, 2009.

22. “System Based Design Descriptions and ITAAC,” *AP1000 Design Control Document*, Rev. 16, Westinghouse Electric Company, May 2007, Section 2.1.3, pp. 12-15, accessed on January 5, 2010.

23. “Reactor Pressure Vessel System,” *ABWR Design Control Document/Tier 1*, Rev. 0, General Electric Nuclear Energy, August 2007, Section 2.1.1, pp. 7-12, accessed on January 5, 2010.

24. Bryce, Robert, *Shrinking Reactors: Robert Bryce Talks to Chris Mowry of Babcock & Wilcox Modular Nuclear Energy About Modular Reactors*, August 24, 2009, <www.robertbryce.com/node/300>, accessed on January 5, 2010.

25. “Small Nuclear Power Reactors,” *World Nuclear News*, January, 2010, <http://www.world-nuclear.org/info/inf33.html>, accessed on January 7, 2010.

26. Millunzi, A.C. and F.A. Silady, *Safety Aspects of the Modular High-Temperature Gas-Cooled Reactor (MHTGR)*, GA-A--19823, August 1989, accessed on January 4, 2010.

27. “Samurai-Sword Maker's Reactor Monopoly May Cool Nuclear Revival,” *Bloomberg.com: News*, March 2008, <http://www.bloomberg.com/apps/news?pid=email_en&sid=aaVMzCTMz3ms >, accessed on January 9, 2010.

28. Japan Steel Works, *Muroran Plant*, <http://www.jsw.co.jp/en/guide/pdf/JSW_MuroranE.pdf >, accessed on October 16, 2009.

29. National Research Council of the National Academies, *America’s Energy Future Technology and Transformation*, Summary Ed, National Academies Press, Washington, D.C., 2009, <http://www.nap.edu/catalog/12710.html>, accessed on January 18, 2010.

30. Hansen, Craig, Babcock and Wilcox, “RE: DOE reactor vessel forging study,” e-mail message, addressed to Johnston, Rick, MPR Associates, Inc., January 13, 2010.

31. Romeo, Jim, Lehigh Heavy Forge, “RE: DOE Reactor Vessel Forging Study; Estimated Cost of Machine Shop,” e-mail message, addressed to Johnston, Rick, MPR Associates, Inc., January 27, 2010.

32. The Babcock & Wilcox Company, *B & W Nuclear Operation Group Mount Vernon Indiana*, <www.babcock.com/library/project_profiles_NOGM.html>, accessed on January 29, 2010.

33. *Severstal Sparrows Point*, <www.severstal.com/eng/businesses/international/north_american/sparrows_point/>, accessed on January 29, 2010.

34. Jorgensen Forge, <www.jorgensenforge.com>, accessed on January 29, 2010.

35. Hamilton, Tyler, “Nuclear Revival Bumps Against Atrophy,” Toronto Star, May 3, 2008, < http://www.thestar.com/Business/article/420941>, accessed on February 3, 2010.

36. “Nuclear Component Orders Bolster JSW Results,” *World Nuclear News*, June 1, 2009, <http://www.world-nuclear-news.org/C-Nuclear_components_bolster_JSW_results-0106094.html>, accessed on February 1, 2010.

37. “Nuclear Industry Revival Offers Manufacturers a Potential Market,” *Entrepreneur*, April 30, 2009, <http://www.entrepreneur.com/tradejournals/article/199685347.html>, accessed on February 1, 2010.

38. Nuclear Energy Institute, *U.S. Nuclear Power Plants General Statistical Information*, [2009], <http://www.nei.org/resourcesandstats/nuclear_statistics/usnuclearpowerplants/>, accessed on December 17, 2009.