Argonne NATIONAL LABORATORY

... for a brighter future

Sodium Fast Reactor

Safety #1

DOE/HQ June 20, 2007

NRC/White Flint June 21, 2007

(Rev. 1, October, 2008)

Presented by: Jim Cahalan

U.S. Department of Energy

THE UNIVERSITY OF CHICAGO

A U.S. Department of Energy laboratory managed by The University of Chicago

Notice

- **This presentation has been revised to remove citations to and information from Applied Technology documents.**

FFTF References

- **Fast Flux Test Facility Preliminary Safety Analysis Report, Vols. 1 and 2, September, 1970.**
- **C. P. Cabell, A Summary Description of the Fast Flux Test Facility, HEDL-400, December, 1980.**
- **D. E. Simpson, *FFTF Design for Safety*, Proc. Fast Reactor Safety Meeting, CONF-740401-P2, pp. 1041-1060, American Nuclear Society, Beverly Hills, California, April 2-4, 1974.**
- **D. E. Simpson, Resolution of Key Safety-Related Issues in FFTF Regulatory Review, Proc. Intl. Mtg. Fast Reactor Safety and Related Physics, CONF-761001, Vol. II, pp.400-410, American Nuclear Society, Chicago, Illinois, October 5-8, 1976.**
- **A. R. Schade and D. E. Simpson, *FFTF Regulatory Review for Operating Authorization*, Proc. Intl. Mtg. Fast Reactor Safety Technology, Vol. 5, pp. 2425-2430, American Nuclear Society, Seattle, Washington, August 19-23, 1979.**
- **Safety Evaluation Report by the Office of Nuclear Reactor Regulation, USNRC, for the Fast Flux Test Facility, USNRC Report NUREG-0358, August, 1978. Supplement No. 1, May, 1979.**

CRBRP References

- **Clinch River Breeder Reactor Plant Preliminary Safety Analysis Report, Project Management Corporation. Vols. 1 – 27. (Updated through amendment 77, May, 1983)**
- **1974 Technical Progress Report, Clinch River Breeder Reactor Project.**
- **L. E. Strawbridge, *Safety Related Criteria and Design Features in the Clinch River Breeder Reactor Plant*, Proc. Fast Reactor Safety Meeting, CONF-740401-P1, pp. 72-92, American Nuclear Society, Beverly Hills, California, April 2-4, 1974.**
- **R. J. Slember, *Safety-Related Design Considerations for the Clinch River Breeder Reactor Plant*, Proc. Intl. Mtg. Fast Reactor Safety and Related Physics, CONF-761001, Vol. I, pp. 112-125, American Nuclear Society, Chicago, Illinois, October 5-8, 1976.**
- **L. E. Strawbridge and G. H. Clare, *Exclusion of Core Disruptive Accidents from the Design Basis Accident Envelope in CRBRP*, Proc. Intl. Mtg. Fast Reactor Safety, Vol. 1, pp.317-327, American Nuclear Society, Knoxville, Tennessee, April 21-25, 1985.**
- **J. G. Giitter and M. W. Akhtar, *An Assessment of the Clinch River Breeder Reactor Core and Containment Response to Core Disruptive Accidents*, Proceedings of the International Meeting on Fast Reactor Safety, Knoxville, Tennessee, American Nuclear Society, CONF-850410, pp. 463-470, April 21-25, 1985.**
- **Safety Evaluation Report Related to the Construction of the Clinch River Breeder Reactor Plant, USNRC Report NUREG-0968, Vols. 1 and 2, March, 1983.**

SAFR and PRISM References

- **Preapplication Safety Evaluation Report for the Sodium Advanced Fast Reactor (SAFR) Liquid-Metal Reactor, USNRC Report NUREG-1369, December, 1991.**
- **Preapplication Safety Evaluation Report for the Power Reactor Innovative Small Module (PRISM) Reactor, USNRC Report NUREG-1368, February, 1994.**
- **P. M. Magee, U.S. ALMR Licensing Status, Proc. Intl. Topical Mtg. Advanced Reactor Safety, pp. 1011-1017, American Nuclear Society, Pittsburg, Pennsylvania, April 17-21, 1994.**

General References

- **H. Hummel and D. Okrent, *Reactivity Coefficients in Large Fast Power Reactors,* American Nuclear Society, 1970.**
- **Hans K. Fauske, *The Role of Core-Disruptive Accidents in Design and Licensing of LMFBRs,* Nuclear Safety, Vol. 17, No. 5, pp. 550-567, September-October, 1976.**
- **A. E. Waltar and A. B. Reynolds, *Fast Breeder Reactors*, Pergamon Press, 1981.**
- **10CFR50 Appendix A, General Design Criteria for Nuclear Power Plants**
- **DOE O 5480.30, Nuclear Reactor Safety Design Criteria**
- **ANSI/ANS-54.1-1989, General Safety Design Criteria for a Liquid Metal Reactor Nuclear Power Plant**

Outline

- **<u>Safety Issues #1 (Today)</u>**
  - **Safety issues; DBA, BDBA, severe accident historically (coolant void, recriticality, FCI), passive safety**
  - **Safety analysis past results (FFTF, CRBRP, SAFR, PRISM)**
  - **Safety analysis methods; reactor, structural, coolant aerosols, containment**
- **<u>Safety Issues #2 (Future)</u>**
  - **Licensing issues in FFTF, CRBRP, SAFR, PRISM. International experience in perspective, high profile issues in Phenix, SuperPhenix, MONJU, BN-350, EBR-1, FERMI explained and lessons learned.**
  - **Inherent passive safety characteristics of sodium fast reactor systems (wrt loss of flow without scram, etc.). Inherent reactivity shutdown, natural circulation decay heat removal**
  - **Safety testing results, EBR-II SHRT, FFTF ULOF (GEMS); TREAT**

Basic Safety Objectives

- **Protect public health and safety**
  - **Reduce the risk from releases of radioactivity to acceptable levels**
  - **Comply with regulatory requirements and provide additional margin**
- **Protect plant worker health and safety**
  - **Provide a safe working environment and reduce risk of injury**
  - **Comply with regulatory requirements and promote worker protection**
- **Protect the environment**
  - **Provide a design that complies with all federal, state, and local requirements**
  - **Build, operate, and decommission the plant in a way that preserves environmental quality**
- **Protect the plant investment**
  - **Provide plant designs, equipment, and operating/maintenance practices to preserve investor equity and return reward**
  - **Maintain product quality and reliability**

Radiation Protection Mechanisms

- **Barriers**
  - **Contain radioactive materials and prevent human exposure or release to the environment**
- **Distance**
  - **Provide spatial margins to reduce the intensity of radiation exposure**
- **Time**
  - **Isolate radioactive material until it has decayed to a stable or less harmful state**

Safety by Design

- **By design, the plant and all its systems are configured and constructed in a manner that assures safe, stable, and reliable operation while preserving protection mechanisms**
- **Engineered safety systems are provided to *prevent* development of conditions that can defeat the basic radiation protection mechanisms, and to *mitigate* the consequences of equipment failure or inappropriate operator actions**
  - **Inherent protection margins (No operator action or equipment activation needed) can be provided by selection of materials and arrangement of components**
- **The design principle of *defense in depth* is applied for important safety-related functions**
  - **Containment**
  - **Reactor shutdown**
  - **Residual heat removal**

Defense in Depth

- **Plant functions that are important to preservation of safety protection mechanisms are designed according to the *defense in depth* principle, which provides multiple layers of safety assurance**
  - **Level 1: Provide a conservative design with large safety margins that can be constructed and operated normally without challenges to safety limits**
  - **Level 2: Provide additional design features that protect against a single, unlikely fault (~once in the plant lifetime). (Limited damage, minor repair).**
  - **Level 3: Provide additional design features that protect against a single, extremely unlikely fault (not expected in the plant lifetime). (Extensive damage, major repair)**
- **Foreseen events at Levels 1, 2, and 3 are within the plant safety design basis, and the most demanding events are usually identified as *Design Basis Accidents (DBAs)***

Defense in Depth Safety Design Features

- **For key safety functions (maintain barriers, keep radioactivity at a distance, and provide time for recovery)**
  - **Multiple, diverse, and independent structures, systems, or components, each of which is capable of achieving the defined safety function**
- **Redundancy, diversity, and independence assure that not all safety function can be lost due to a single failure**
- ***Safety grade* systems, components, and systems are designed and maintained to criteria that assure their reliable operation**
  - **Quality assurance, inspection, testing, repair, ...**
  - **Seismic, electrical supply, …**

Safety Design Features

- **Containment of radioactive material by multiple physical barriers**
  - **Fuel cladding**
  - **Primary coolant system boundary**
  - **Containment structure**
- **Reactor shutdown by multiple reactor control and protection systems**
  - **Primary scram system for startup, shutdown, reactor power changes, and power distribution management**
  - **Secondary scram system, always available for activation**
- **Residual heat removal by multiple heat transport paths and systems**
  - **Normal heat removal system (SG, condenser)**
  - **Dedicated shutdown heat removal systems (HXs, forced or natural circulation, from primary or secondary coolant, through vessel wall)**

Sodium Fast Reactor Characteristics

- **Fast spectrum, compact core design (400 MW FFTF example)**
  - **High power density (~400 kW/liter, PWR 100 kw/liter)**
  - **High coolant velocity (~20 ft/sec)**
  - **High linear pin power (~8 kW/ft, PWR 5 kW/ft), short core height (~3 ft, PWR 12 ft)**
  - **Small fuel pins (~0.23 in OD, PWR 0.37 in) on a tight triangular pitch (P/D~1.2, PWR ~ 1.5 sq) grouped in hexagonal ducted fuel assemblies**
  - **Oxide (FFTF) or metallic (EBR-II) fuel with a high fissile content (~20%, PWR ~3%)**
  - **Core coolant rise ~300ºF (PWR ~63ºF), outlet ~980ºF (PWR 620ºF) (Na NBP ~1638ºF)**
- **Low pressure (~atmospheric) coolant**
  - **Large temperature margin to boiling (~4X Power/Flow Ratio in typical reactor designs for flow transients at core outlet pressure)**
  - **Pool (EBR-II) or loop (FFTF) primary system design, with backup guard vessel and piping to assure core cooling if the primary vessel leaks**
  - **Intermediate heat exchanger isolates radioactive sodium within containment, transfers heat to second sodium loop which transports heat to steam generator (or for FFTF, air dump heat exchangers) outside containment**

Fast Flux Test Facility (FFTF) Chronology

- **Conceptual design studies 1966-1969**
- **PSAR submitted by HEDL in September 1970**
- **Initial construction authorization in September 1971; full construction authorization in March 1972**
- **ACRS letter in May 1973**
- **FSAR submitted by HEDL in December 1975**
- **Construction complete/Na fill 1978**
- **Criticality February 1980, full power October 1980**
- **Research operations April 1982 to April 1992**
- **DOE Shutdown order December 1993**

FFTF Design

- **Mission: Provide a prototypic LMFBR operating environment for testing and development of fuels, materials, and components**
  - **Secondary: Develop design and construction experience**
- **400 MWt, MOX fuel (22% and 27% Pu), three loop primary system, three intermediate sodium loops to air dump heat exchangers**
- **Reactor core: 73 fuel assemblies, 9 control assemblies, 9 test assemblies**
- **Coolant inlet 680°F (360°C), outlet 980°F (527°C)**
- **10psi steel containment**
- **Two independent reactor shutdown systems (both by moveable rods)**
- **Natural convection decay heat removal through three independent loops**
  - **Pony motors on primary and secondary pumps**
- **Core physics and structural design for inherent negative power and temperature reactivity feedbacks**

FFTF Site – Hanford, Washington

FFTF Containment Building View

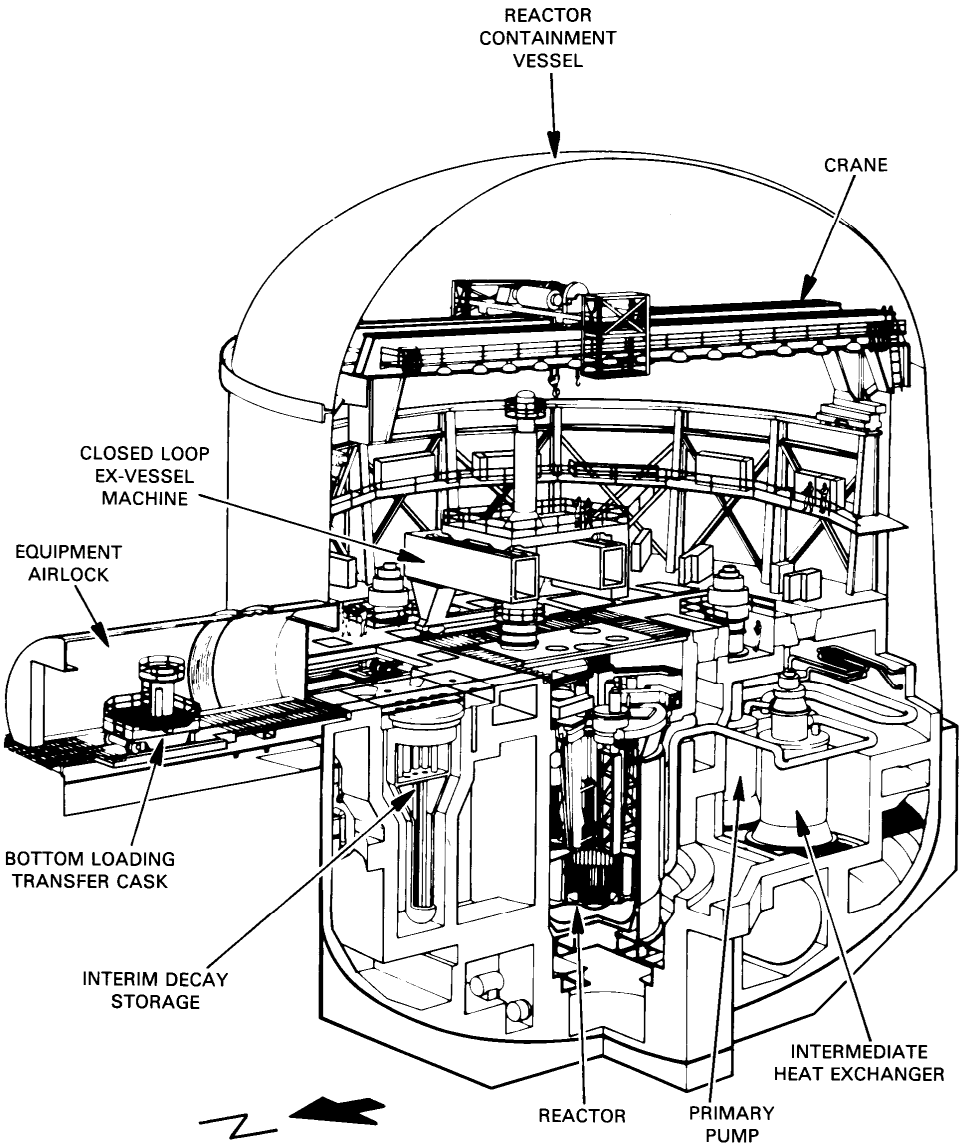

FFTF Loop-Type Primary and Secondary Systems

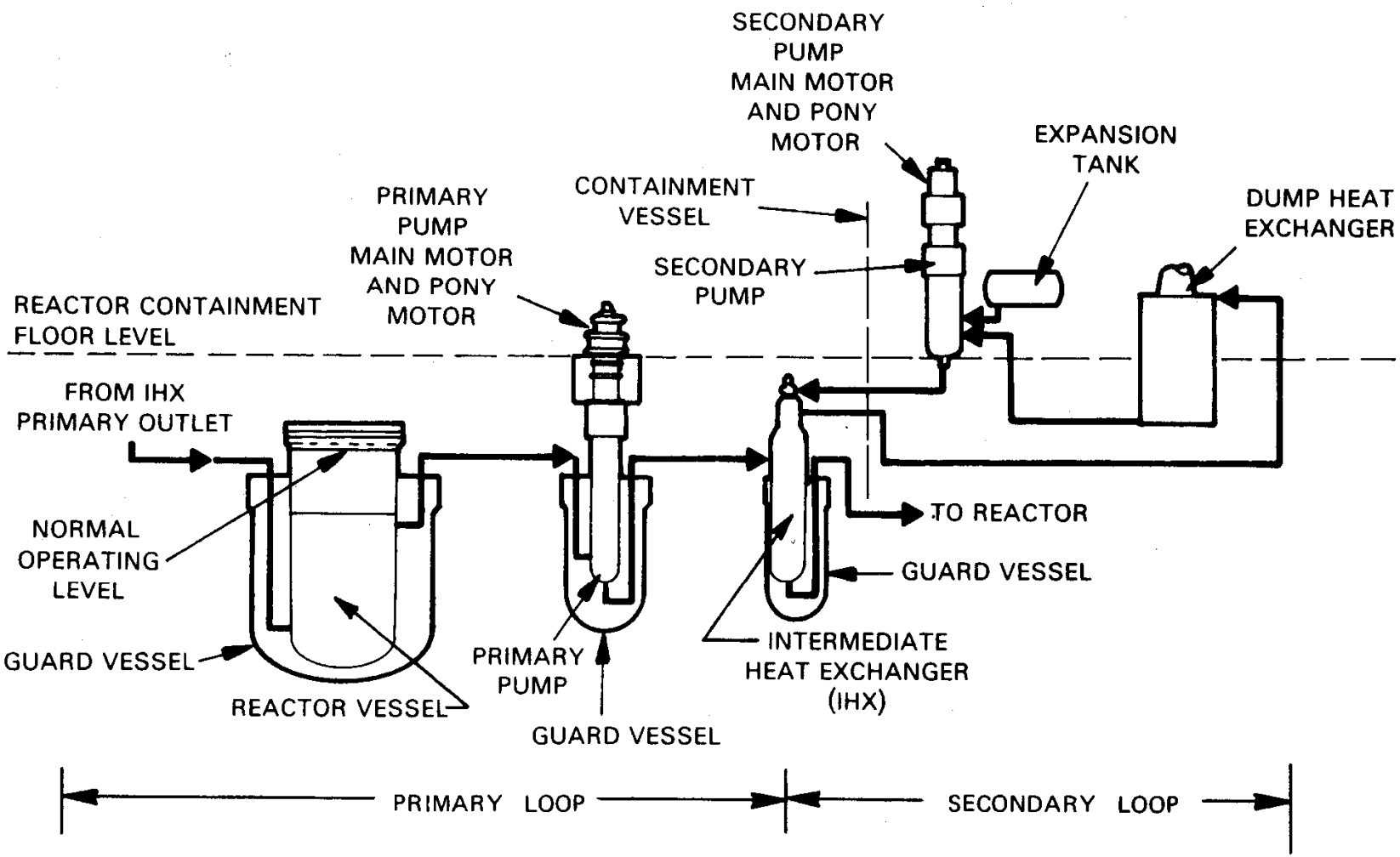

FFTF Reactor and Vessel Design

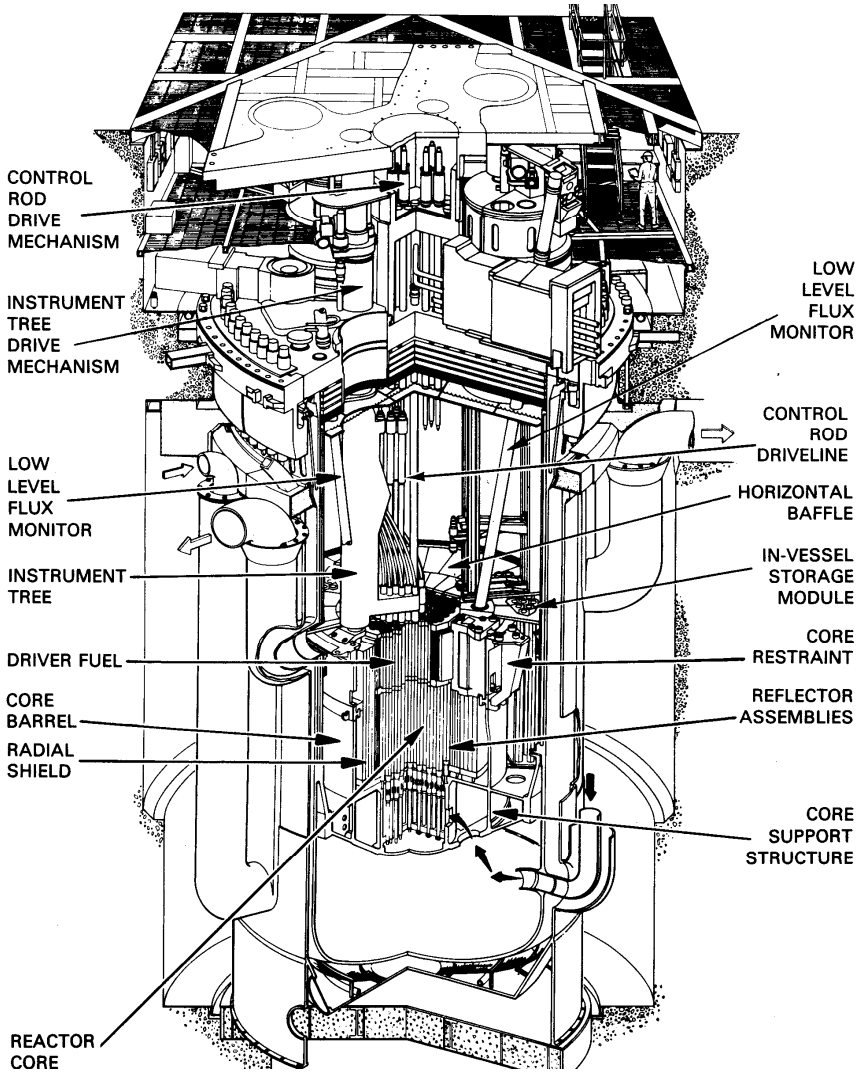

FFTF Construction View

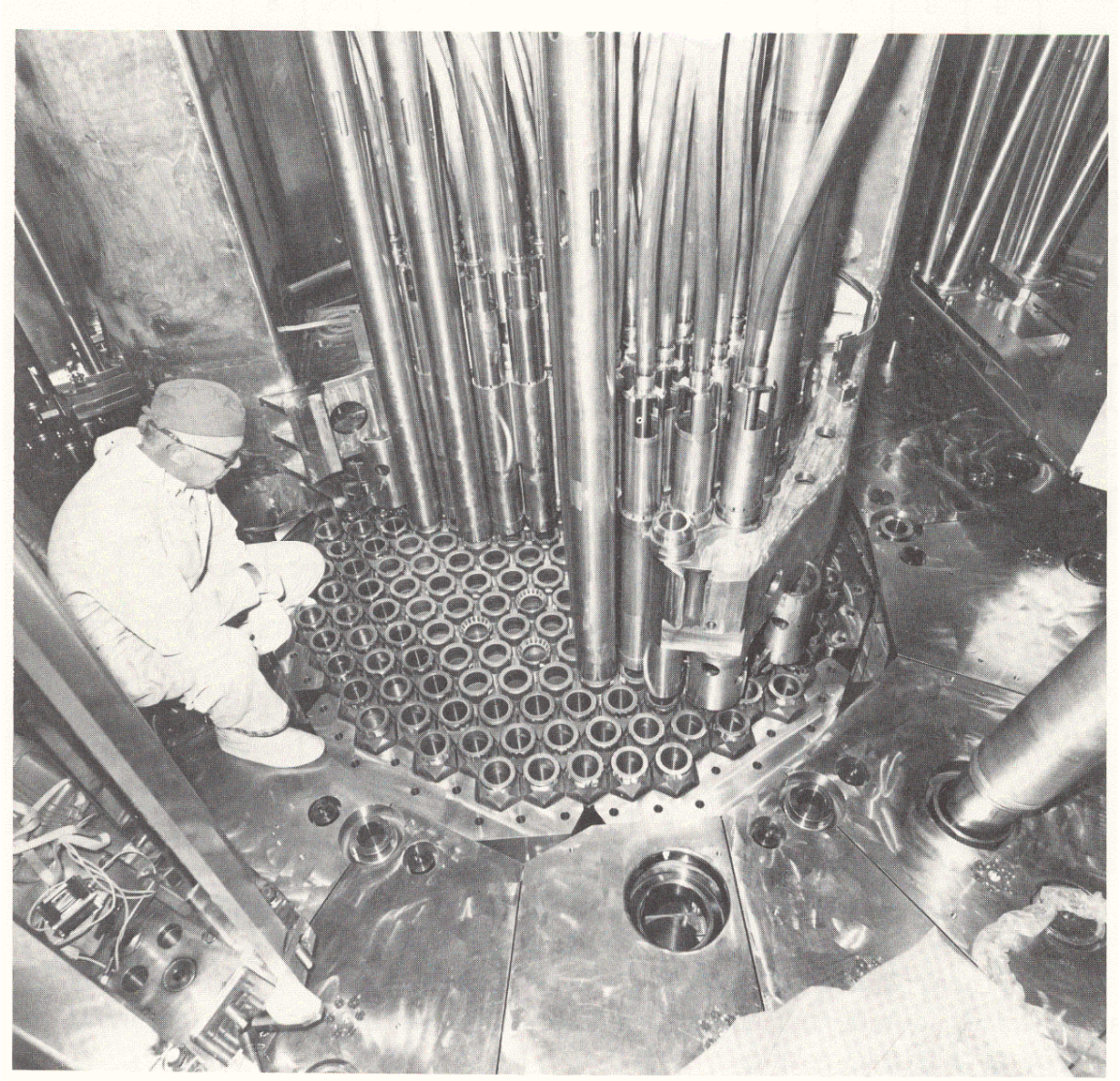

- Simulated core assemblies
- Two of three instrument trees in place

FFTF Driver Fuel Pin

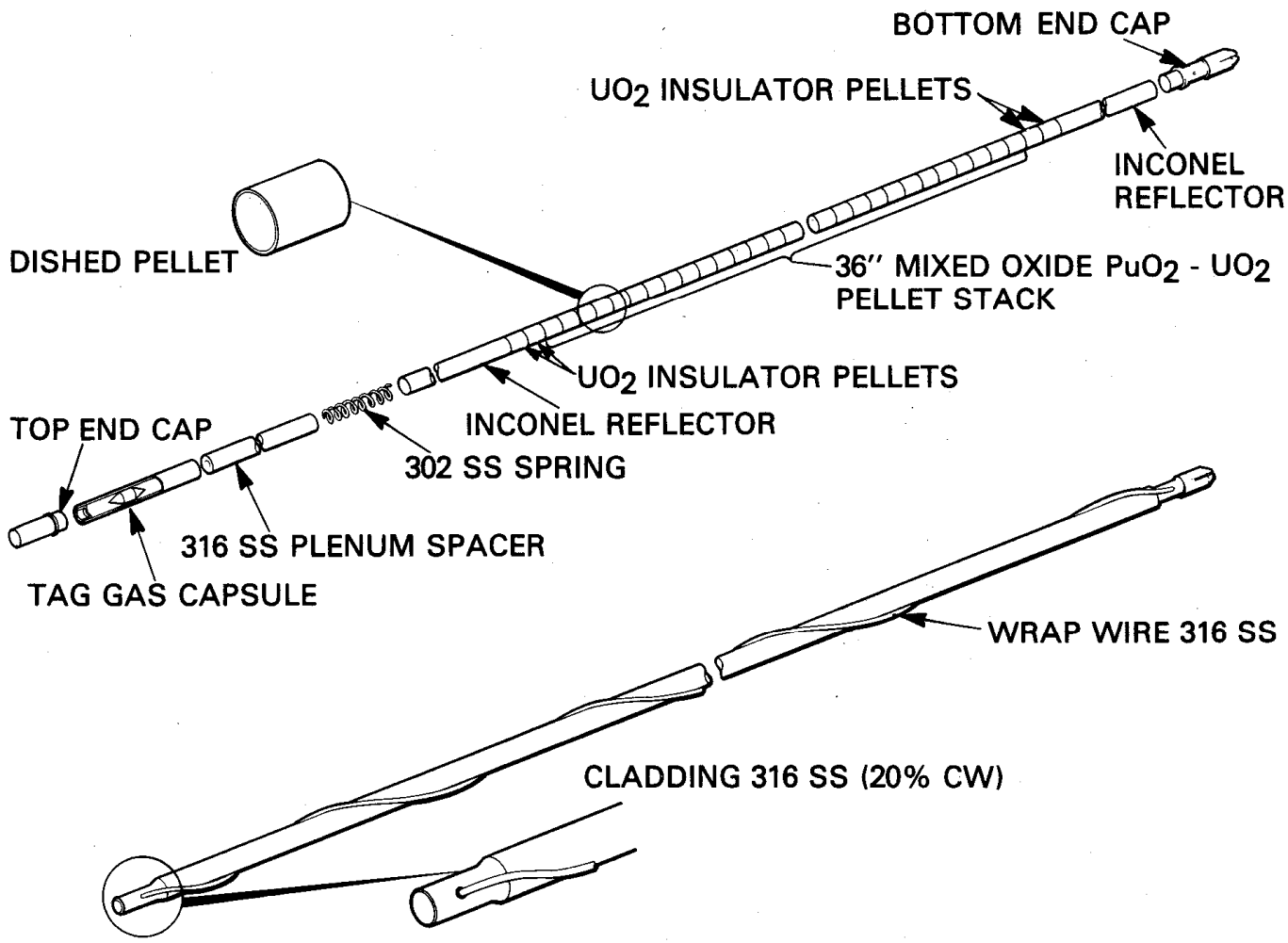

FFTF Driver Fuel Assembly

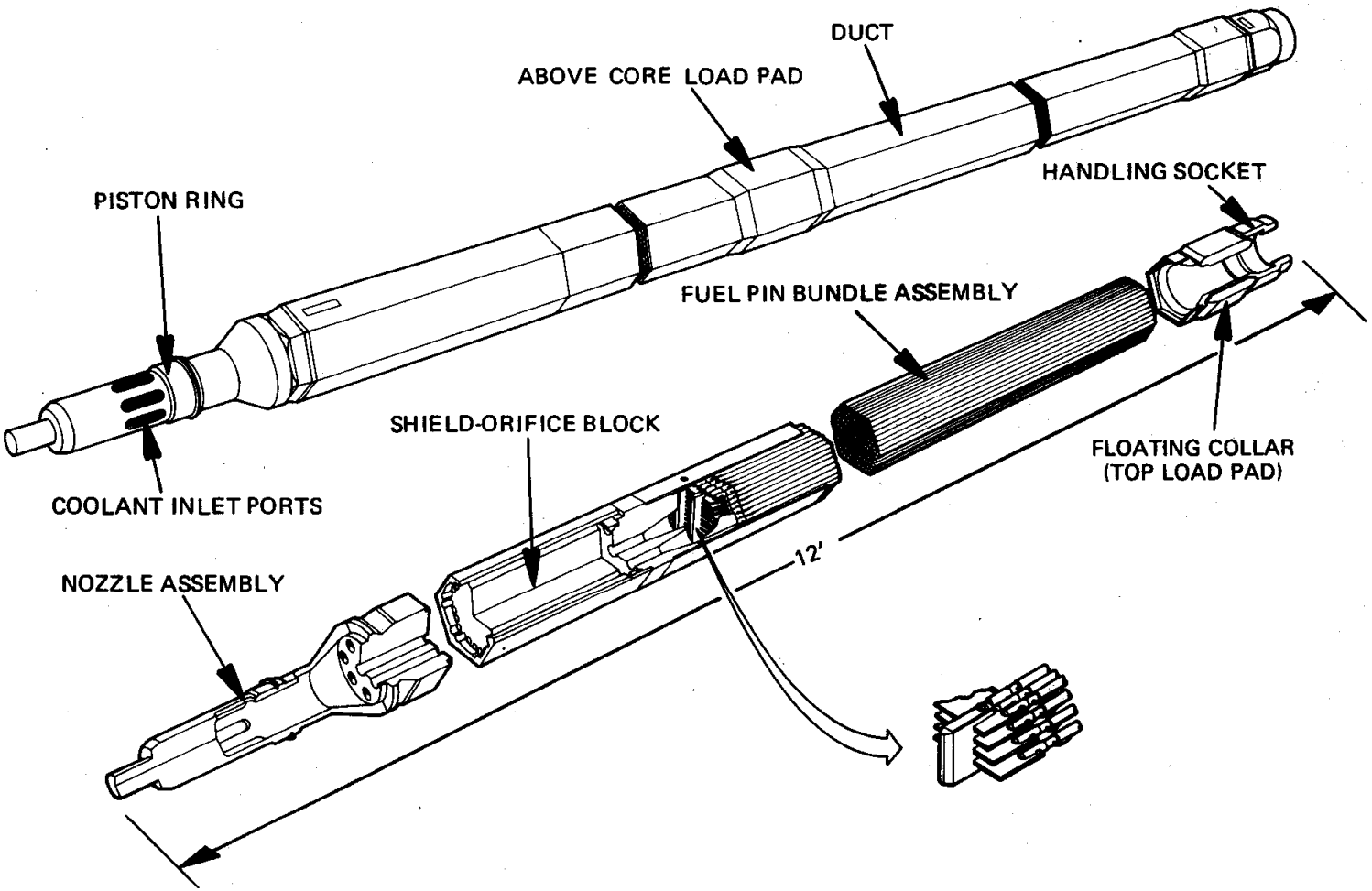

FFTF Core Layout

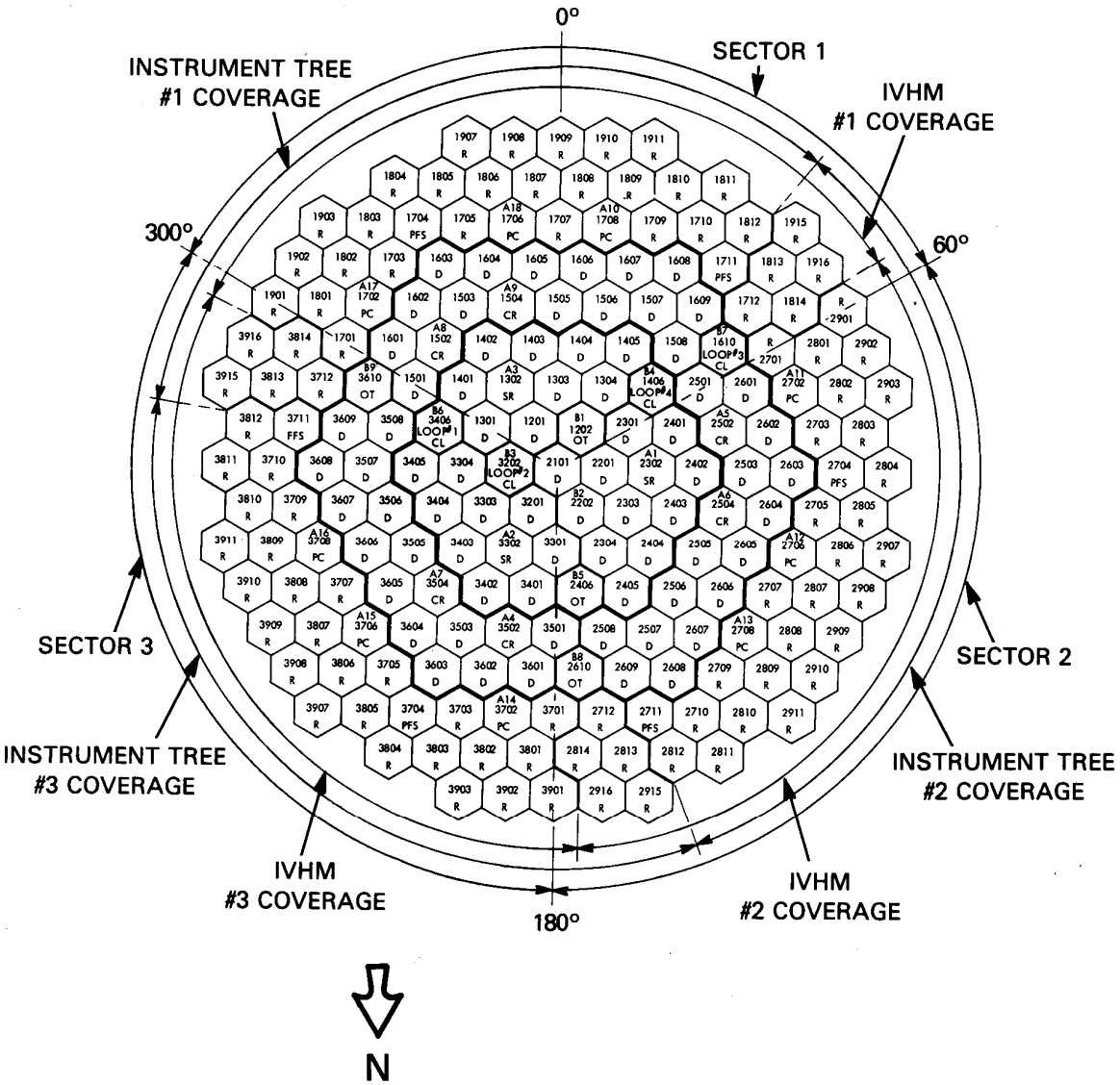

Clinch River Breeder Reactor Plant (CRBRP) Chronology

- **June 1970. U.S. Congress enacts Public Law 91-273 authorizing AEC to design, construct, and operate an LMFBR demonstration plant.**
- **January 1972. Joint proposal by Commonwealth Edison and TVA accepted.**
- **March 1972. Two not-for-profit organizations established. Project Management Corporation (PMC) for project management, and Breeder Reactor Corporation (BRC) for utility industry liaison.**
- **November 1972. Westinghouse-Advanced Reactor Division (W-ARD) selected as lead reactor manufacturer, Burns and Roe (B&R) as A/E.**
- **February 1973. Initial work authorization. AI and GE added to team.**
- **January 1974. AEC/W-ARD contract signed.**
- **PSAR submitted April 1975 (Updated through Rev. 77 May 1983)**
- **Licensing suspended: commercial reprocessing banned March 1977**
- **Licensing resumed September 1981**
- **NRC Safety Evaluation Report (NUREG-0968) March 1983, ACRS letter**
- **Funding stopped October 1983**

CRBRP Design

- **Mission: Demonstrate the safe and reliable operation of an LMFBR in a utility environment. Demonstrate LMFBR economics, and the transition from technology development to commercial operation**
- **975 MWt, 380 MWe (gross), MOX fuel (22% and 32% Pu), three loop primary system, three intermediate sodium loops to steam generators**
- **Reactor core: 198 fuel assemblies (108 inner/90 outer), 19 control assemblies (15 primary/4 secondary), 150 radial blanket assemblies**
- **Coolant inlet 730°F (388°C), outlet 995°F (535°C)**
- **10psi steel containment**
- **Two independent reactor shutdown systems (both by moveable rods)**
- **Decay heat removal through three independent loops**
  - **Pony motors on primary and secondary pumps**
  - **Auxiliary decay heat removal through water side of SG**
- **Direct decay heat removal system independent of HTS loops**
- **Core physics and structural design for inherent negative power and temperature reactivity feedbacks**

Clinch River Breeder Reactor Plant (CRBRP)

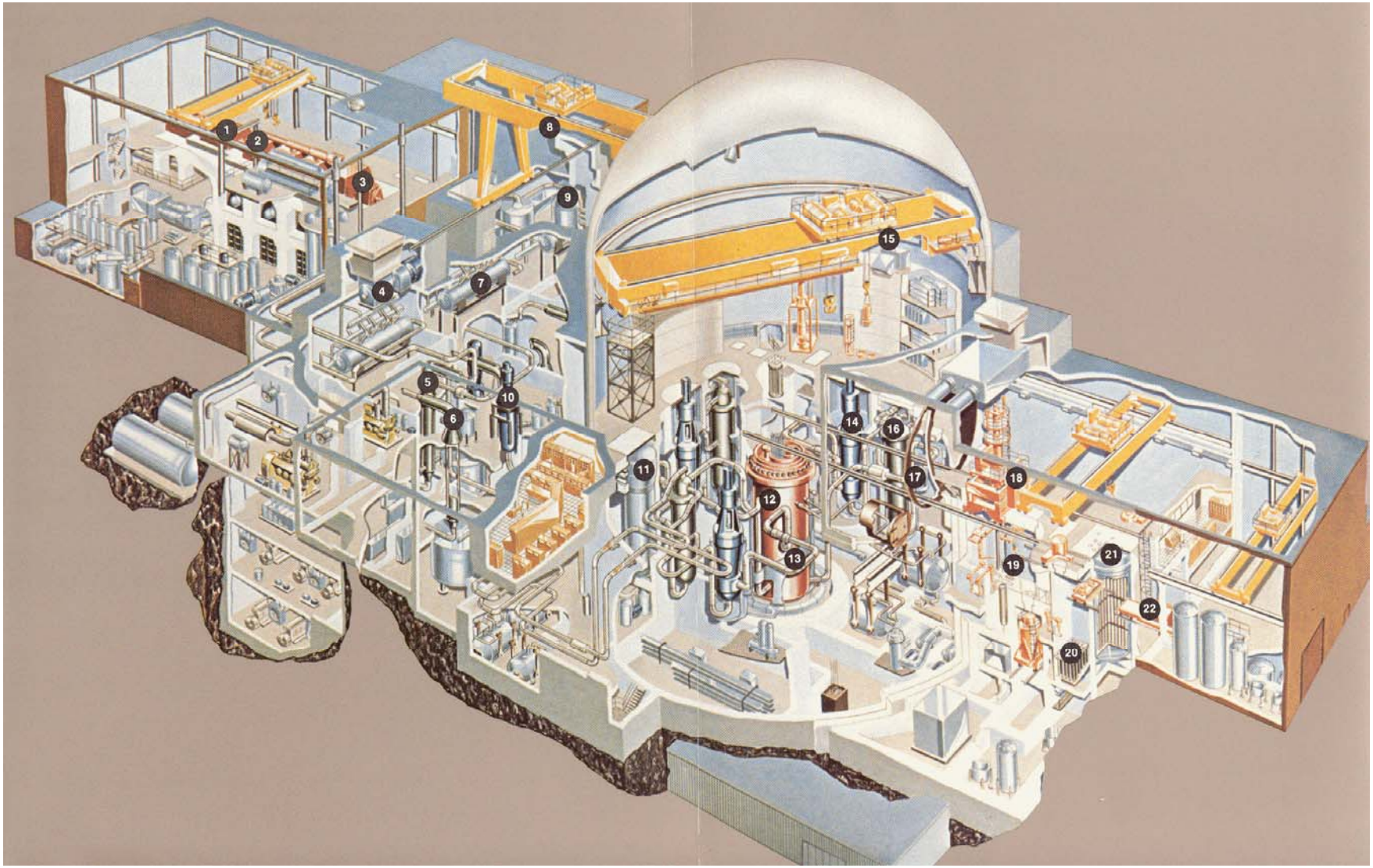

CRBRP Heat Transport and Power Conversion Systems

CRBRP Design

CRBRP Design

CRBRP Design

SAFR and PRISM Background and Chronology

- **Beginning in the early/mid 1980's, DOE funded conceptual design studies for modular advanced liquid metal reactor plants**
  - **At Rockwell International, the Sodium Advanced Fast Reactor (SAFR)**
  - **At General Electric, the Power Reactor - Inherently Safe Module (PRISM)**
- **Preliminary Safety Information Documents for SAFR and PRISM were submitted to NRC in November, 1986**
- **The initial SAFR and PRISM concepts focused on innovative design approaches for economics and safety**
  - **Design simplification based on passive safety performance**
- **DOE subsequently (ca 1988?) selected the PRISM concept for continued development in the Advanced Liquid Metal Reactor (ALMR) program**
- **NRC issued pre-application SERs for SAFR (1991) and PRISM (1994)**
- **DOE support for PRISM design studies ceased with the cancellation of the ALMR program in 1994**

SAFR Design

- **Multiple (4) power units per site co-located with a spent fuel processing facility**
- **900 MWt reactor, U-Pu-Zr metallic fuel, pool type primary system, two intermediate loops**
- **60 year plant life**
- **Reactor core: 96 driver fuel assemblies, 46 internal and 48 radial blanket assemblies, 6 control assemblies, 3 safety assemblies**
- **Coolant outlet 950°F (510°C), inlet 675°F (357°C)**
- **Inherent response for emergency reactor shutdown**
  - **Inherent reactivity feedbacks in temperature and flow transients**
  - **Self-Actuated Shutdown System (SASS); thermally-activated magnetic latch release**
- **Two natural circulation decay heat removal systems**
  - **Direct heat removal from hot sodium pool (DRACS)**
  - **Ambient air cooling of guard vessel (RACS)**
- **Compact containment building design**

SAFR Module View

SAFR Module Elevation

SAFR Pool-Type Primary System

SAFR Decay Heat Removal Systems

PRISM Design

- **Multiple power modules (6) co-located with a spent fuel reprocessing facility (Module reactor size grew as the concept evolved, to 840 MWt in 1995. The SER looks at the 471 MWt design)**
- **840 MWt, U-Pu-Zr metallic fuel, pool-type primary system, two intermediate loops**
- **Reactor core (burner): 192 fuel assemblies, 10 control assemblies, 3 safety assemblies**
- **Coolant outlet 930°F (500°C), inlet 680°F (360°C)**
- **One safety grade automatic reactor protection system, with a manually operated safety grade ultimate shutdown system (3 safety rods)**
  - **Inherent accommodation of ATWS transients without core melt, significant reactivity addition, or large radiological release**
- **Shutdown cooling by turbine bypass with emergency removal systems**
  - **Air cooling system (ACS) on the steam generator shell**
  - **Primary sodium auxiliary cooling system (PSACS); reqs. valve action**
  - **Reactor vessel air cooling system (RVACS)**
- **Compact containment shell design**

PRISM Module Arrangement

PRISM Reactor Building

PRISM Reactor Vessel

PRISM Heat Removal Systems

Special Safety Considerations for SFRs -- 1

- **Low pressure, chemically reactive coolant**
  - **For pool-type design, all radioactive sodium contained within reactor vessel, with secondary guard vessel for leak protection**
  - **For loop-type design, guard vessels and double piping; equipment in steel-lined, inerted cells within containment**
  - **Guard vessels and double pipes fulfill ECCS role for core coverage**
- **Reactor shutdown and residual heat removal requirements**
  - **Diverse, redundant, independent, safety grade systems**
  - **Potential for natural circulation designs due to large thermal heat capacity of coolant systems for time margin, excellent sodium heat transfer and buoyancy properties for natural convection**
- **Containment loading mechanism for design basis**
  - **Low pressure coolant, leak-before-break**
  - **Sodium oxidation with air; heating, aerosol generation, pressurization**

Special Safety Considerations for SFRs -- 2

- **Low pressure, liquid metal boiling**
  - **Only relevant for beyond design basis power, flow, or heat removal accident sequences**
  - **Flow regime: low pressure and high heat flux leads to rapid vapor formation, large vapor bubbles that fill the hexcan radially and move upwards due to buoyancy or forced liquid flow**
  - **Vapor bubbles condense in unheated, above-core region**
  - **Moving vapor bubbles leave behind a relative thick liquid film (~15% of original vol. frac.); sodium wets stainless steel at high temperature**
  - **Liquid film absorbs heat from cladding, and evaporates; can also be stripped by high vapor velocities**
  - **High two-phase pressure drop with boiling can stop assembly liquid flow (parallel flow system)**
  - **Boiling can remove low power (< 1% ?), but higher heat fluxes lead to coolant voiding, followed by cladding dryout, temperature increase, and cladding failure**
- **Coolant voiding may introduce significant positive reactivity, depending on the core design**

Sodium Boiling Model Features (SAS4A)

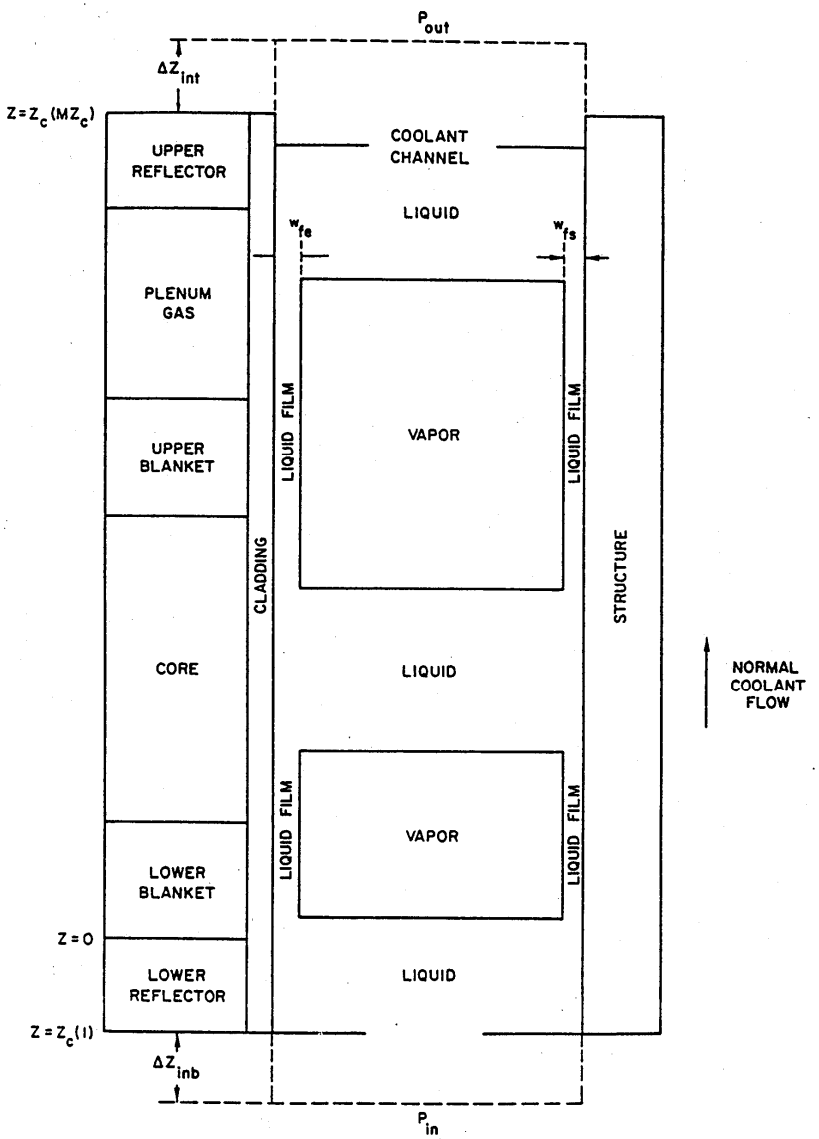

Special Safety Considerations for SFRs -- 3

- **Fuel melting and relocation**
  - **Only relevant for beyond design basis power, flow, or heat removal accident sequences (Unprotected = Without reactor scram)**
  - **Without cooling, cladding failure and fuel melting will occur rapidly, within seconds for full power levels**
  - **Modes of cladding and fuel melting and relocation depend on reactor power and coolant flow conditions, and type of fuel (oxide or metal)**
    - ***Unprotected transient overpower accident (UTOP)***
    - ***Unprotected loss-of-flow accident (ULOF)***
    - ***Unprotected loss-of-heat-sink accident (ULOHS)***
- **Fuel compaction in a fast reactor will introduce significant positive reactivity**
  - **Fast reactors have a fuel inventory of several/many critical masses, depending on design**
  - **The reactivity state of the reactor is sensitive to small (thermal expansion) fuel relocations**
  - **Gross fuel motion in accidents can yield energetic power excursions**

Special Safety Considerations for SFRs -- 4

- **UTOP Accident Sequence**
  - **External reactivity insertion (i.e. control rod withdrawal) without scram; time scale depends on insertion rate**
  - **Reactor power increases with full coolant flow; inherent reactivity feedback mechanisms may limit power increase**
  - **At around 4X normal power, cladding will rupture locally, and molten fuel will discharge through the cladding failure**
- **ULOF Accident Sequence**
  - **Coolant flow coastdown without scram; time scale depends on coastdown rate**
  - **Outlet coolant temperature rises with flow coastdown; inherent reactivity feedback mechanisms may reduce power**
  - **At around 4X Power/Flow, coolant boils, and voiding leads to loss of fuel cooling and reactivity increase**
  - **As fuel and coolant temperatures increase, melting and relocation will occur**

Special Safety Considerations for SFRs -- 5

- **ULOHS Accident Sequence**
  - **Loss of heat removal (e.g. SG feedwater) propagates a temperature increase through the coolant systems that eventually results in a reactor inlet temperature increase (pumps still running); slow time scale (minutes) due to large coolant systems heat capacity**
  - **Coolant temperature increases with inlet temperature rise; inherent reactivity feedbacks may reduce reactor power**
  - **As coolant temperature increases to boiling, bubbles formed are sweep out of the core by pump head, until local boiling pressure drop increase overcomes pump (parallel flow system)**
  - **Coolant void formation can lead to fuel heating and melting**
- **Fuel relocation implications**
  - **Initially compactive motion will yield positive reactivity; dispersive motion will yield negative reactivity**
  - **Extended ex-core fuel motion will yield large shutdown reactivity**
  - **If the fuel is coolable, relocation will cease**
  - **If sufficient fuel collects ex-core, recriticality may occur**

Initiating Phase Fuel Relocation Model Features (SAS4A)

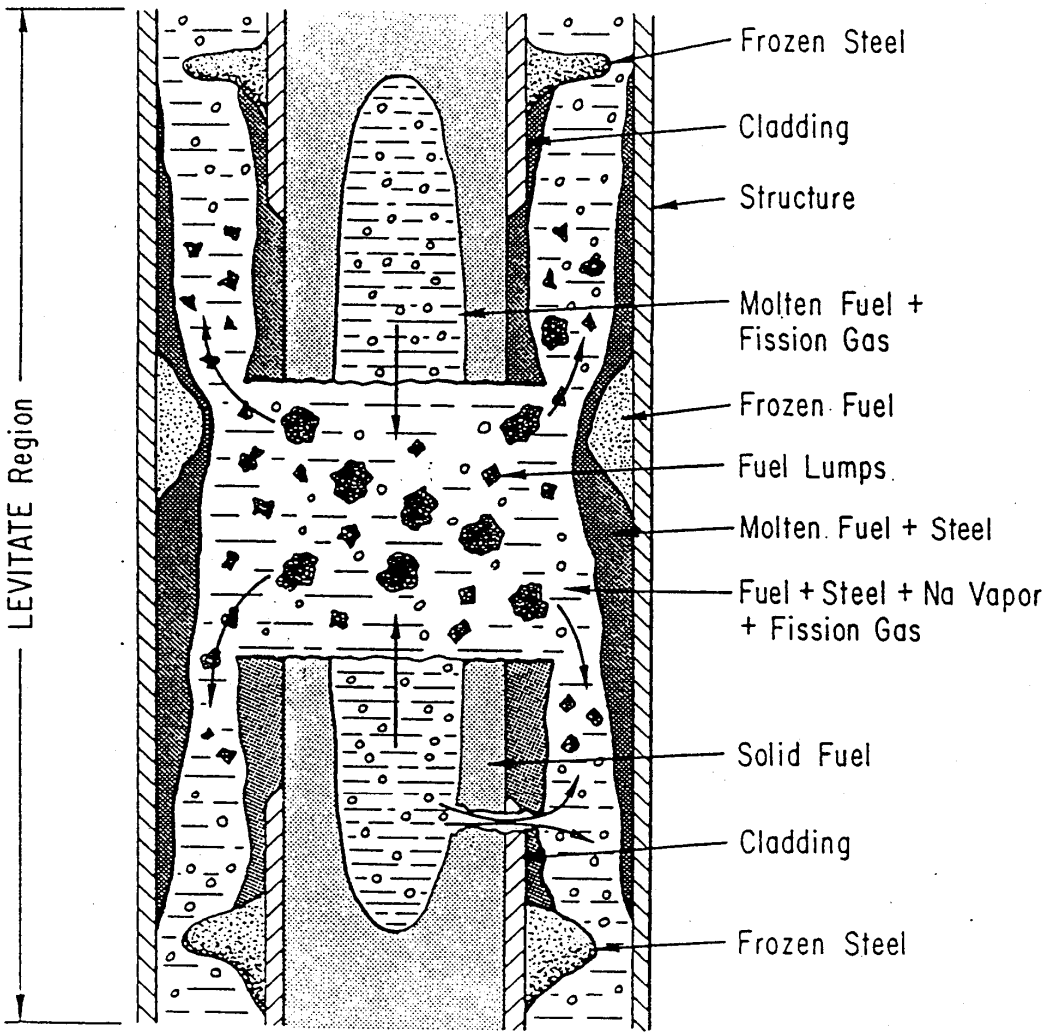

Inherent Protection in Unprotected SFR Accident Sequences

- **After the FFTF and CRBRP era, continued R&D identified the potential for SFR design options that provide inherent reactivity feedback mechanisms to reduce fission power and natural circulation cooling options to remove heat in ULOF, ULOHS, and UTOP accident sequences**
  - **Metallic fuel; high thermal conductivity, lower operating temperature, less 'stored' reactivity to overcome for power reduction to decay heat**
  - **Sodium coolant natural circulation decay heat removal**
- **EBR-II tests of ULOF and ULOHS accident sequences from 100% power and flow initial conditions demonstrated inherent protection potential with metallic fuel and sodium coolant**
- **FFTF ULOF tests from 50% power with GEMS**
- **EBR-II and FFTF test results covered in future presentation**
- **SAFR and PRISM designs incorporated inherent protection design features to eliminate coolant boiling, cladding failures, and fuel melting in ULOF, UTOP, and ULOHS accident sequences**

Regulatory Reviews for Safety Design Assurance

- **Sodium fast reactors have design features to prevent severe accident progression, and to mitigate the consequences of extremely unlikely accidents**
  - **Safety by design, Defense in Depth**
  - **Reactor scram, shutdown heat removal, containment**
- **Past regulatory reviews of SFR projects**
  - **FFTF: SAR, SER, ACRS letter**
  - **CRBRP: SAR, SER, "met CP requirements"**
  - **SAFR: PSID, Pre-application SER**
  - **PRISM: PSID, Pre-application SER**
- **Safety review basis provided by the SAR**
  - **Design development and safety review proceeds from the General Design Criteria**

General Design Criteria - 1

- 10CFR50 Appendix A lists criteria in six areas for an LWR
  - Overall Requirements (1 through 5)
  - Protection by Multiple Fission Product Barriers (10 through 19)
  - Protection and Reactivity Control Systems (20 through 29)
  - Fluid Systems (30 through 46)
  - Reactor Containment (50 through 57)
  - Fuel and Radioactivity Control (60 through 64)
- ANS 54.1 lists criteria in the same areas for a liquid metal-cooled reactor (LMR)
  - Some criteria deleted/added/changed compared to 10CFR50 because of generic design differences
- DOE O 5480.30 lists safety design criteria for a DOE reactor
  - Criteria written to apply to all DOE reactors
- Cross comparison of individual criteria provided in Appendix A

General Design Criteria - 2

- **LMR Design Characteristics (compared to LWR)**
  - **Low pressure coolant; "leak before break"; reduces DBA focus on pipe break and loss-of-coolant; eliminates ECCS requirement by supplying secondary guard pipes and vessels to maintain core coverage in the event of leaks**
    - ***Loop vs. Pool arrangement***
  - **Chemically reactive reactor coolant; adds requirement for leakage detection and multiple barriers to mitigate consequences; cell liners and inert cell atmosphere for loop-type primary system; fire suppression systems; steam generator instrumentation and pressure relief**
  - **Sodium heating to prevent freezing**
  - **Enhanced potential for natural circulation residual heat removal**
  - **Enhanced potential for inherent protection against reactivity and cooling faults**

General Design Criteria - 3

- **Top level safety requirements for an LMR are the same as for an LWR**
  - **Diverse, independent, redundant <u>reactor shutdown systems</u>**
    - ***Normally, two safety-grade reactivity shutdown systems; independent instrumentation and power supplies***
    - ***Role for inherent reactivity feedback protection?***
  - **Diverse, independent, redundant <u>residual heat removal systems</u>**
    - ***Normally, two safety-grade decay heat removal systems; independent instrumentation and power supplies***
    - ***For diversity and reliability, one of the systems may be a natural circulation system***
  - **Multiple <u>barriers for release of radioactivity</u>**
    - ***Fuel cladding, primary coolant boundary, containment building***
    - ***Role for reduced volume containment, or alternative confinement system?***

General Design Criteria - 4

- **Domestic and international experience has demonstrated the feasibility of successful LMR licensing**
  - **Design flexibility provided by sodium coolant properties in normal operation**
- **Potential severe accident safety issues associated with positive coolant voiding reactivity or core melt scenarios have been successfully treated as beyond-design-basis phenomena**
  - **Severe accident probability reduced through conservative design, large safety margins, and adherence to defense-in-depth design philosophy**
  - **Analysis of severe accidents with "best estimate" (not conservative) modeling assumptions to provide measure of thermal and structural margins beyond the design basis; significant resources applied**

General Design Criteria - 5

- **Is there a design basis role for LMR inherent safety characteristics?**
  - **With sodium cooling, reactor thermal safety margins are already large**
  - **Emphasis of self-protection design features can utilize natural safety margins to provide enhanced reactivity feedback and reactor cooling mechanisms to further reduce the probability of severe accidents for faulted initiators**
  - **Enhanced natural circulation decay heat removal at high temperatures**
  - **Inherent protection in under-cooling (loss-of-coolant-flow or loss-of-heat-sink) or over-power (reactivity insertion) accidents without scram**

Safety Documentation for Licensing - 1

- **SAR Chapter 15 Accident Analysis Example: Clinch River Breeder Reactor Plant (CRBRP) Safety Design Approach and Design Basis Accident (DBA) Classification**
  - **Design Level 1: Normal Operation. Prevention of accidents by intrinsic features of design, construction, and operation, including quality assurance, redundancy, testability, and maintainability.**
  - **Design Level 2. Anticipated Faults and Unlikely Faults. Provide design features to protect against errors or malfunctions.**
  - **Design Level 3. Extremely Unlikely Faults. Provide extra protection in the design basis to assure public safety for events <u>not</u> expected to occur in the life of the plant.**
  - **In Chapter 15, accident sequences classified as "Anticipated", "Unlikely", or "Extremely Unlikely" are defined and analyzed as design basis events**
    - ***Accident analysis techniques include consideration of uncertainties***

Safety Documentation for Licensing - 2

- **Chapter 15 Accident Analysis (cont.)**
  - **The CRBRP DBAs are listed in Appendix B. 17 Anticipated Events, 21 Unlikely Events, 23 Extremely Unlikely Events**
  - **The events are design specific**
  - **Classification of events taken from RDT Standard C-16-1**
  - **Anticipated: Faulted event that may occur once or more in the plant life, no damage, return to operation after fault correction**
  - **Unlikely: Faulted event not individually expected during the plant life, but one or more events in whole category may occur in the plant life, some damage requiring repair for return to operation**
  - **Extremely unlikely: Faulted event with such a low probability that no events in the whole category are expected in the plant life, damage sufficient preclude resumption of operation but no loss of safety function**

Safety Documentation for Licensing - 3

- **DBA acceptance criteria are established for affected systems, structures, and components**
  - **Criteria based on performance requirement for a class of events, usually expressed as a limiting temperature or mechanical limit**
  - **For some structures and components, may use ASME Code**
- **CRBRP acceptance criteria example for fuel pins**
  - **Basis:**
    - ***maintain cladding integrity in Anticipated and Unlikely faults***
    - ***maintain coolable geometry in Extremely Unlikely faults***
    - ***limiting criteria based on enveloping thermal/mechanical analysis***
  - **Anticipated fault: no fuel melting and cladding temperature < 1500°F**
    - ***Fuel melting ~ 4800°F (MOX fuel)***
    - ***Cladding melting ~ 2500°F (316 SS)***
  - **Unlikely fault: no fuel melting and cladding temperature < 1600°F**
  - **Extremely unlikely fault: no cladding melting or coolant boiling**
    - ***Coolant boiling ~ 1800°F (Reactor outlet pressure)***

Safety Documentation for Licensing - 4

- **In the SAR Chapter 15 presentation, it is demonstrated that the selected set of design basis accidents result in reactor and plant design compliance with the acceptance criteria**
  - **In a successful regulatory review, both applicant and regulatory agree that the set of DBAs envelope and characterize the satisfactory performance of the safety design, in compliance with the general design criteria and applicable regulations**

Beyond Design Basis -- Core Disruption Accidents

- **The role of core disruption accidents in licensing was addressed by Fauske, 1976, during the CRBRP regulatory review**
  - **The consensus view (industry, regulator, and R&D) was that core disruption accidents (CDAs) should be considered and analyzed in the design review and licensing process, but that their probability of occurrence should (and must) be reduced to a level that justifies exclusion from the design basis.**
  - **Consequence assessment should be made on a best-estimate basis using 'realistic' data and methods rather than arbitrarily conservative assumptions.**
- **In earlier analyses for FFTF (See Appendix A of the FFTF FSAR) the case had been made for a 'conservative upper bound HCDA case'**
  - **Consequence assessment was used to estimate barrier challenge, containment performance, and radiological consequences**
- **For CRBRP, beyond design basis structural and thermal margins were assessed in relation to calculated accident energetics**

FFTF Core Disruption Accident Analysis -- 1

- **Documented in FSAR Appendix A**
- **Analyzed bounding UTOP and ULOF accident sequences for estimation of consequences and demonstration of the ability of the containment to provide protection of public health and safety**
  - **UTOP initiators: 0.03 $/s (max. by design) to 0.5 $/s without scram**
  - **ULOF initiators: complete loss of primary pumping without scram**
- **Initiating phase accident analyses tracked with detailed modeling to the point of initial fuel melting and dispersal**
  - **Reactor power reduction, but for the ULOF sequence, the reactor state may not be coolable, leading to further melting and transition to whole core melting**
- **Whole core disruption phase analyzed with scoping tools to assess modes and rates of fuel relocation, assessment of associated reactivity transients, and resulting energy deposited in the fuel**

FFTF Core Disruption Accident Analysis -- 2

- **Work-energy analysis to assess conversion of fuel energy to pressure loading of reactor structures**
- **Mechanical consequences assessment to determine damage to structures and reactor vessel**
- **Post-accident heat removal assessment to scope final core debris stability and coolability**
- **Radiological assessment to scope radioactivity release**
- **Conclusions**
  - **Neither the UTOP nor the ULOF lead to significant public risk**
  - **UTOP: Initial cladding failures, fuel sweep-out and dispersal, remainder of core is coolable in place, fuel within intact reactor vessel**
  - **ULOF: Whole core disruption and dispersal, moderate pressure transient causes minor coolant ("~300 lbs") and fuel ("<1%") loss from vessel, containment structure remains intact (0.1 % per day leak rate)**
  - **30 day dose at site boundary is >100X below guidelines for reactor siting**

FFTF Core Disruption Accident Analysis Scenarios

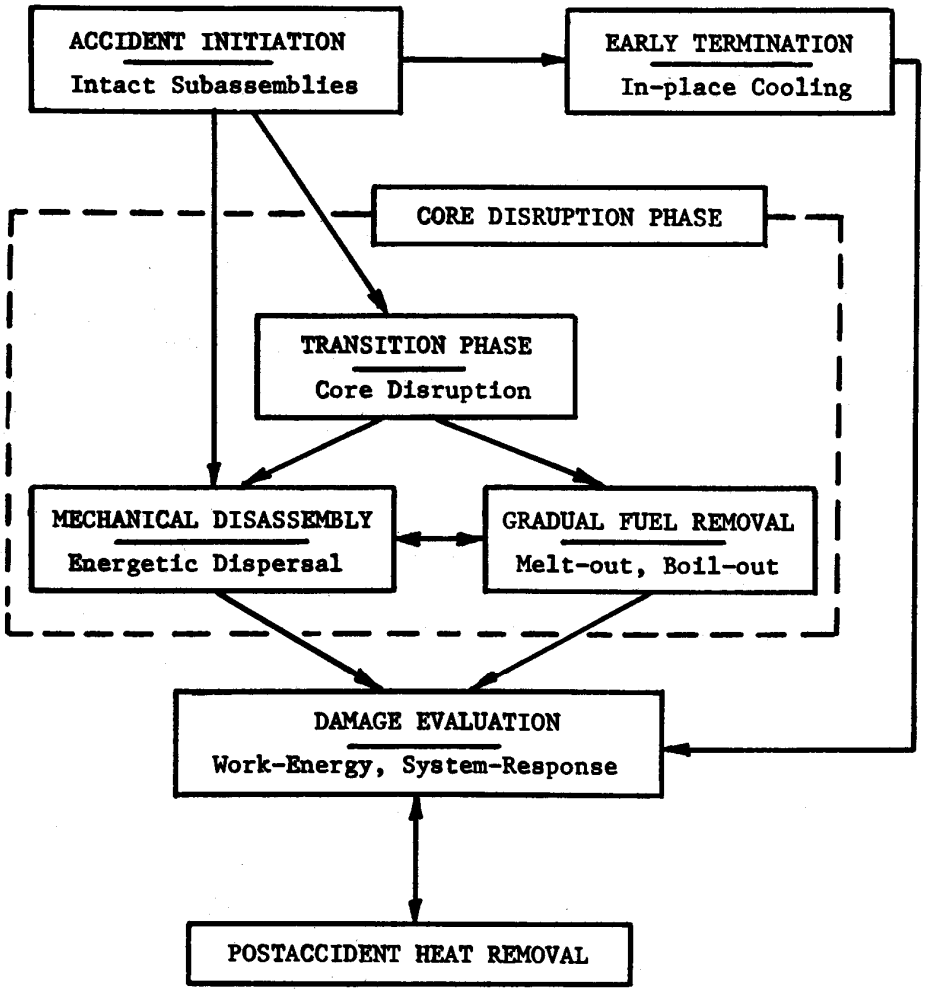

FFTF UTOP Core Disruption Accident Analysis Scenarios

FFTF UTOP Reactivity Transient

FFTF UTOP Power Transient

FFTF ULOF Core Disruption Accident Analysis Scenarios

FFTF ULOF Flow Coastdown

FFTF ULOF Power and Reactivity Transients

FFTF Core Disruption Work-Energy Model Example

FFTF Core Disruption Work-Energy Model Results

FFTF FSAR HCDA Radiological Consequences

CRBRP Core Disruption Accident Analyses --1

- **Initially document in PSAR Appendix D**
  - **PSAR Appendix D was deleted in Amendment 24, July 1976**
  - **Core Disruption Accidents were excluded from the design basis, see papers by Strawbridge and Slember**
  - **The limiting design basis accident for containment challenge was PSAR *15.6.1.1 Primary Sodium In-Containment Storage Tank Failure During Maintenance* (See Appendix B)**
- **However, the subject of core disruptive accidents and their consequences were extensively analyzed and discussed by the project and NRC. (At one point, the CDA issue determined the critical path for the licensing schedule)**
  - **NRC discussion in SER Appendix A**
  - **Project Reports:**
    - ***CRBR-3, Hypothetical Core Disruptive Accident Consideration in CRBRP, Volumes 1 and 2, Revision 4, 1982***

CRBRP Core Disruption Accident Analyses --2

- **Extensive analyses were performed by General Electric (using Argonne codes and data) and by Argonne Natl. Lab.**

CRBRP Core Disruption Accident Analyses --3

- **Compared to FFTF, the issue in CRBRP was the larger core size (975 MWt vs 400 MWt), and the implications for energetics**
  - **~2.5X initial core power in the same diameter reactor vessel**
  - **~3.5 $ coolant void worth compared to ~0 in FFTF**
- **The role of the larger coolant void reactivity worth altered the ULOF scenario**
  - **In FFTF, coolant boiling and voiding had little reactivity effect, so initial fuel disruption occurred at near nominal power in a 'dry' core**
  - **In CRBRP, coolant boiling and voiding introduced positive reactivity and raised the power level, so cladding failure and initial fuel disruption occurred at elevated power (~10X P_o) in a core with significant liquid sodium (and corresponding reactivity) still present**
  - **CDA attention was focused on the ULOF and the potential for initiating phase energetics**
- **Attention on the CDA issue was emphasized by the role of CRBRP as a prototype demonstration design**

Fauske (1976) Illustration of Work Energy Estimates

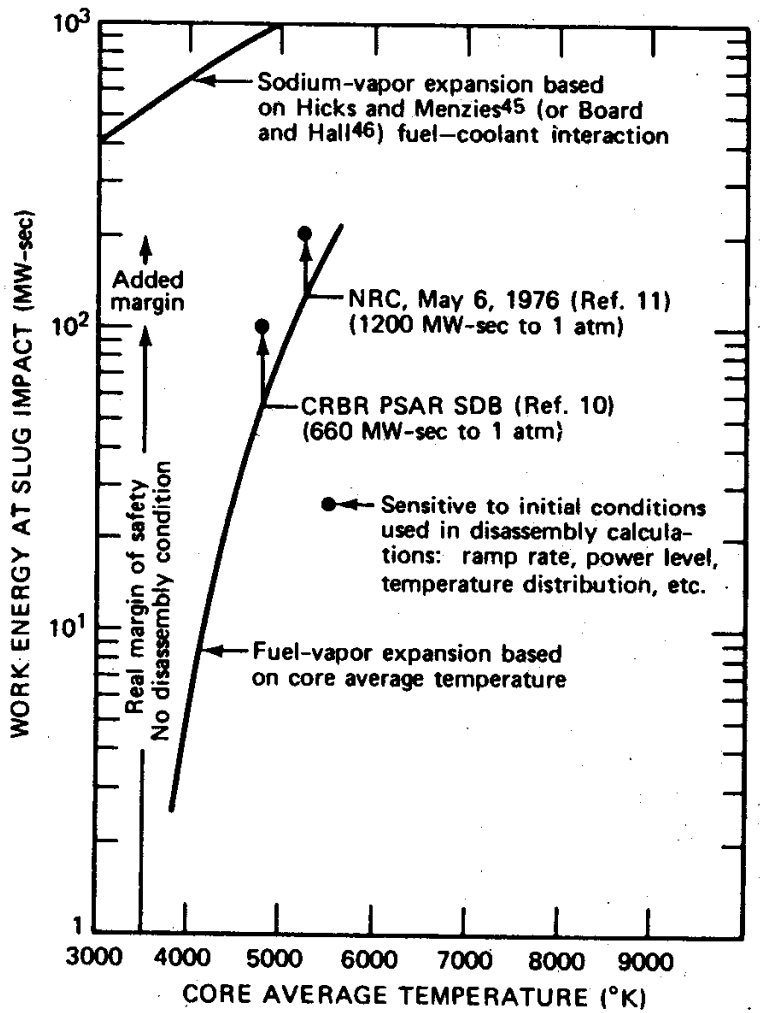

Example CRBRP ULOF Analysis Results

- **Nominal base case results for best-estimate phenomenological assumptions (similar to FFTF analysis assumptions) yields a non-energetic initiating phase**
  - **Peak power ~12X P_o, peak reactivity ~0.8 β**
- **Bounding case results**
  - **Neglect of reactivity feedback from axial thermal expansion**
  - **"Pessimistic" modeling assumptions for initial fuel dispersal**
  - **"Pessimistic" modeling of cladding failure and subsequent fuel motion in low power fuel that fails late into unvoided or partially voided coolant channels ('Fuel-coolant interaction' or 'LOF-driven-TOP')**
  - **Peak power ~2750X P_o, peak reactivity ~1.06 β, peak fuel temperature ~6000 K, average core fuel temperature ~4480 K, isentropic fuel expansion work energy ~680 MJ (CRBRP structural margin design basis ~ 661 MJ)**

CRBRP Nominal ULOF Analysis Results: Power and Reactivity

CRBRP Nominal ULOF Analysis Results: Coolant Reactivity

CRBRP Nominal ULOF Analysis Results: Fuel Reactivity

CRBRP Bounding ULOF Analysis Results: Power and Reactivity

Resolution of CRBRP CDA Issues for Licensing

- **See 1985 papers by Strawbridge and Giitter, and NUREG-0968 Appendix A Section A.6**
- **NRC approved the project position on CDA energetics**
  - **Contingent on changes to the fuel pin design, the rotating plugs design, and analysis and testing results for cell liner performance**
  - **NRC sponsored independent analyses at LANL**
  - **Concluded that containment would not be challenged by missiles or spray fires, and radiological consequences would depend on the beyond-design-basis containment thermal margins to deal with sodium spills and hydrogen burns. NRC concluded that the design could adequately deal with such challenges, and that the risk from a CDA in CRBRP was not significantly different from the risks from typical LWRs.**

SAFR and PRISM Safety Analyses

- **By mission, the SAFR and PRISM conceptual designs were developed under a mandate for innovation, modularity, and reduced costs**
- **This mission prompted new approaches to interpretation of the General Design Criteria and the Defense-in-Depth principle**
  - **Reliance on inherent mechanism in place of active systems for reactor shutdown and residual heat removal**
  - **With large initial (fuel and coolant) safety margins and very reliable inherent safety mechanisms, the probability of CDAs was dramatically reduced, and containment designs were adjusted accordingly**
- **The SAFR and PRISM projects engaged NRC and a dialog on begun. However, the designs did not reach full maturity, and the projects terminated with issues unresolved**
  - **See the SAFR and PRISM SERs, and the GE paper by Pat Magee**

SAFR and PRISM GDC, DBA, and BDBA

- **The SAFR and PRISM PSIDs present the designer proposals for the GDCs, and the SERs document the NRC responses**
  - **Mostly in agreement, with some divergences**
- **The SAFR and PRISM projects supplied only minimal DBA analyses, because of the immaturity of the designs.**
  - **Designs were evolving, in part due to additional mission requirements and in part due to interactions with NRC**
- **Considerable emphasis was placed on passive safety accommodation of the ULOF, UTOP, and ULOHS accident sequences while maintaining substantial margins to prevent CDA progression and severe accident consequences**
  - **The combination sodium cooling, a pool-type primary system, and metallic fuel provides the potential for self protection mechanisms to prevent severe accident consequences**

SAFR and PRISM Passive Safety Mechanisms

- **Pool-Type primary system**
  - **All primary coolant confined to a single vessel with no external piping. Eliminates pipe break (leak) accident scenario (with appropriate redundancy in pump-to-inlet plenum connection)**
- **Sodium coolant**
  - **Low operating pressure eliminates pipe or vessel rupture possibility**
  - **With oxygen control, no corrosion of steel structural material**
  - **Superior heat removal properties due to high thermal conductivity, volumetric heat capacity, and thermal expansion for buoyancy (natural convection)**
- **Metallic fuel**
  - **High thermal conductivity, low operating temperature, low invested cold-to-hot reactivity to compensate for shutdown**
  - **Hard spectrum and high density promotes low burnup reactivity swings, minimizing control rod worths and external reactivity**

Reactivity Swing for Power Reduction

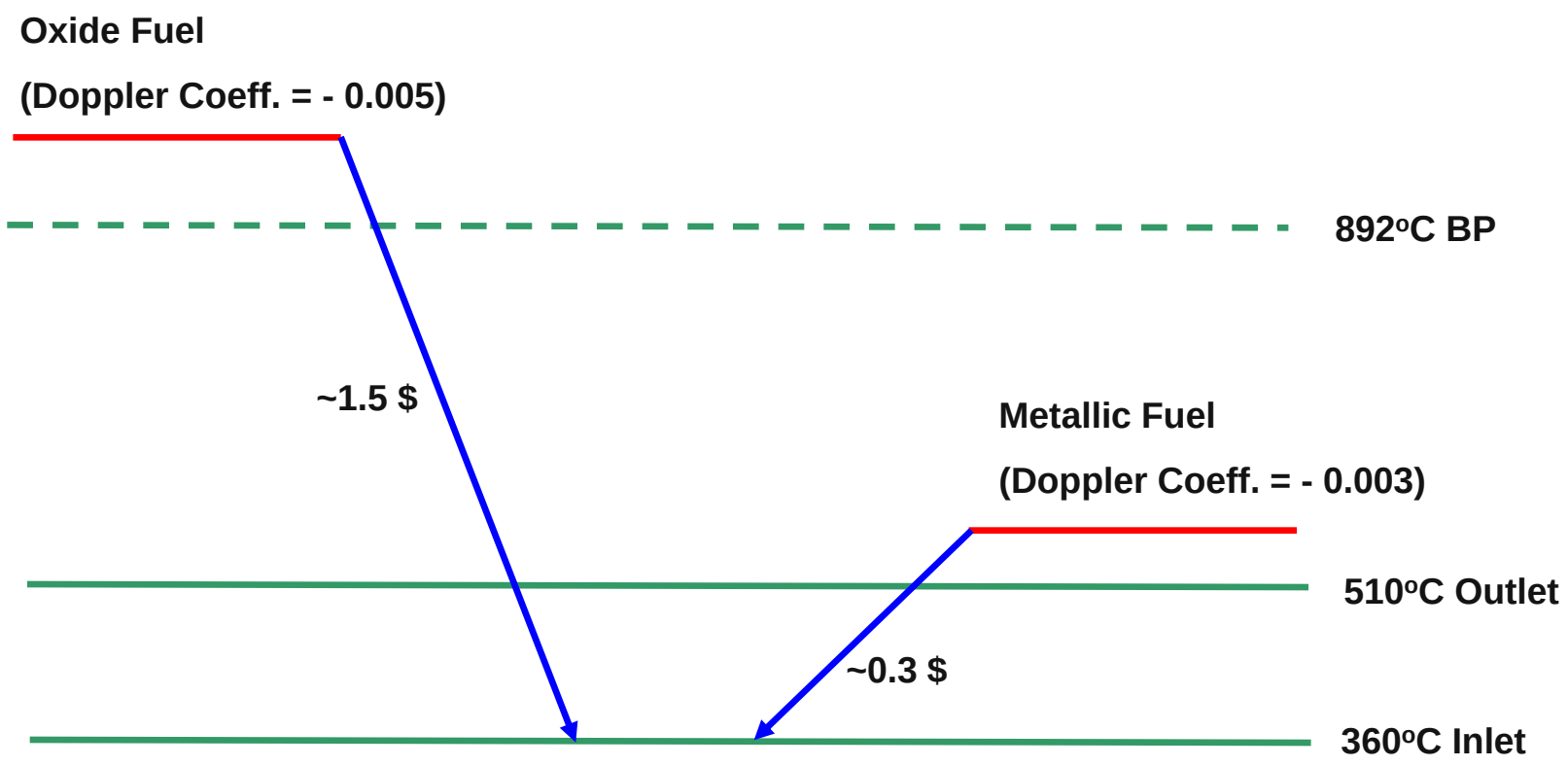

Small Fast Reactor ULOF Power and Flow

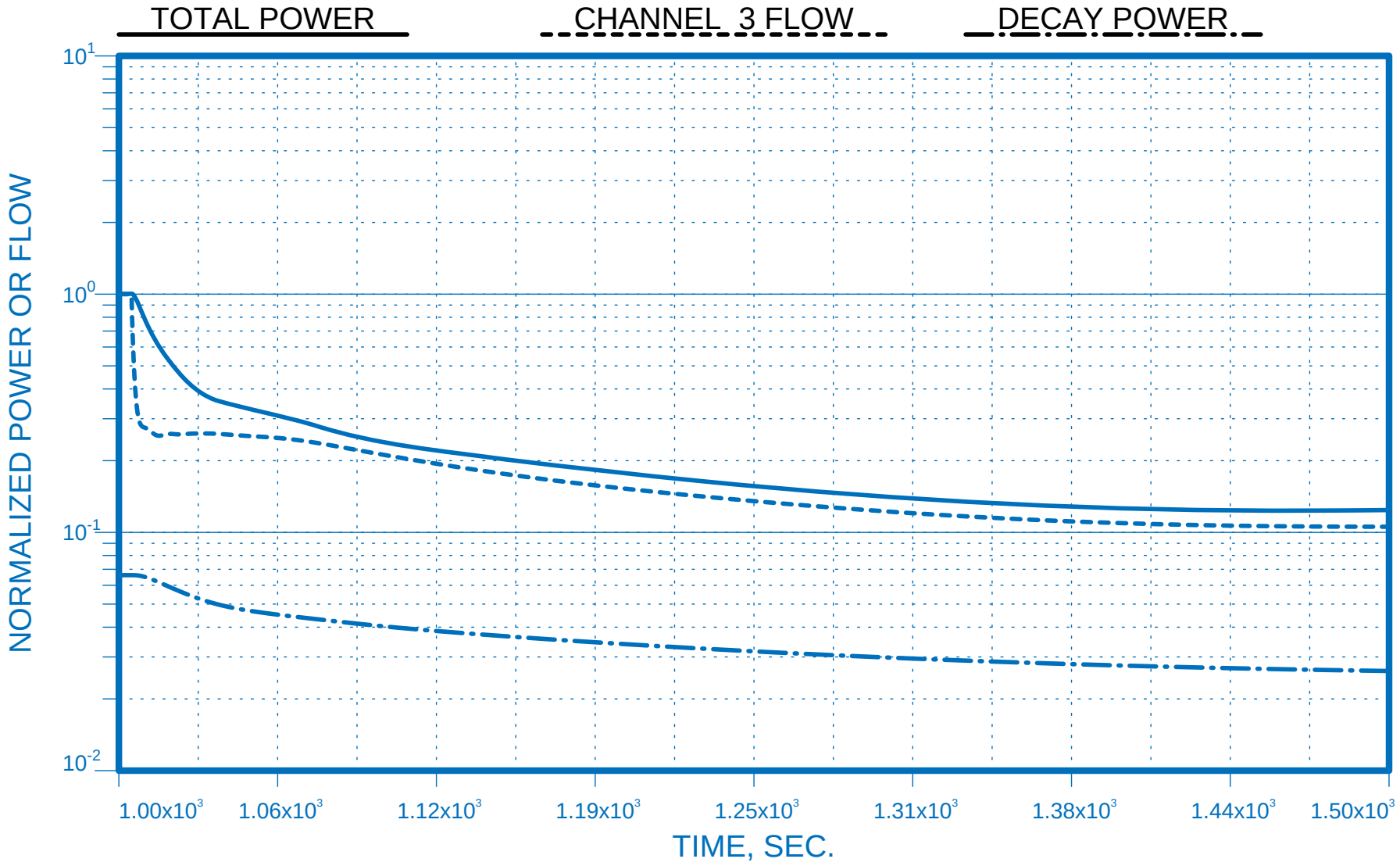

Small Fast Reactor ULOF Reactivities

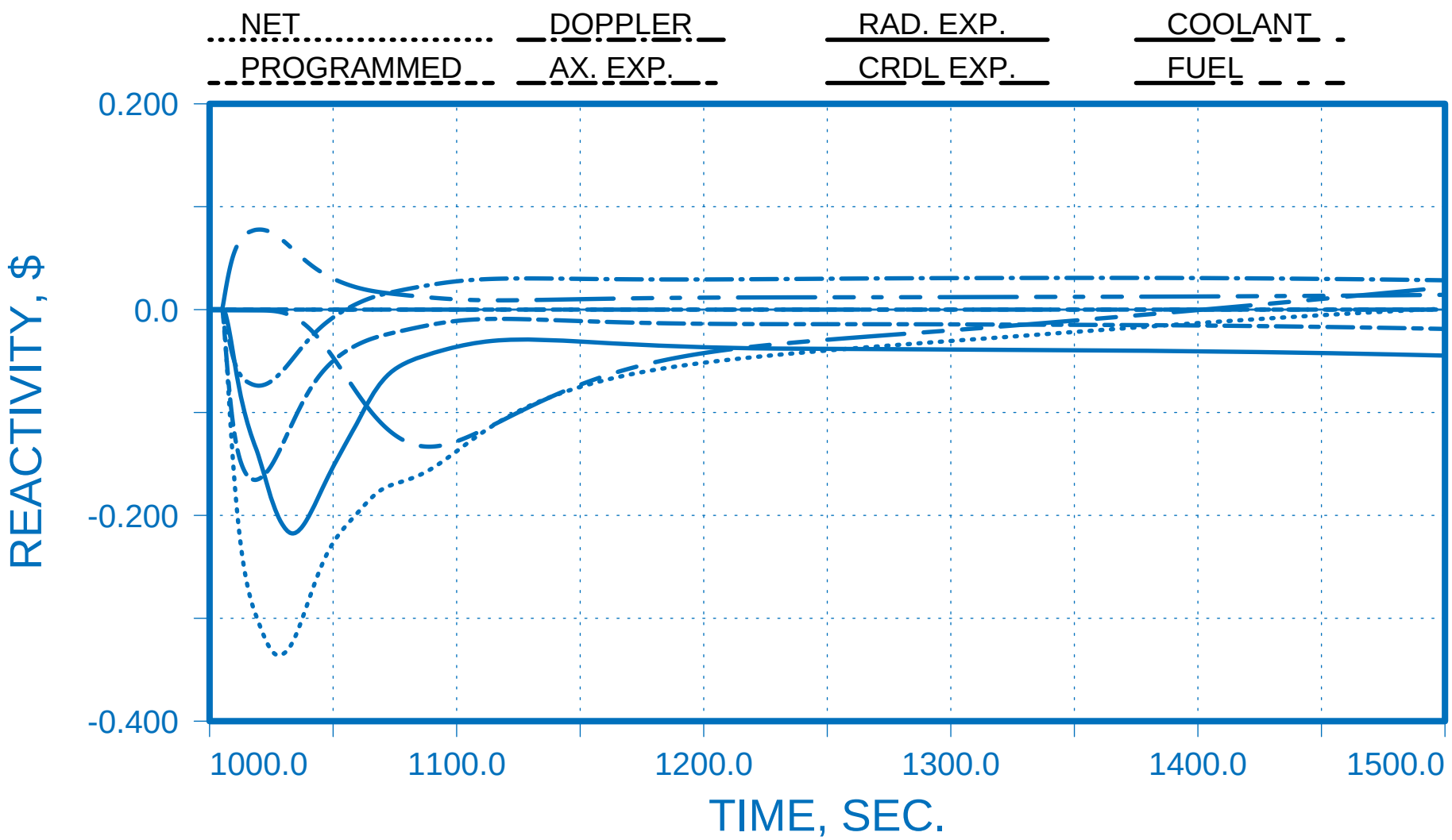

Small Fast Reactor ULOF Temperatures

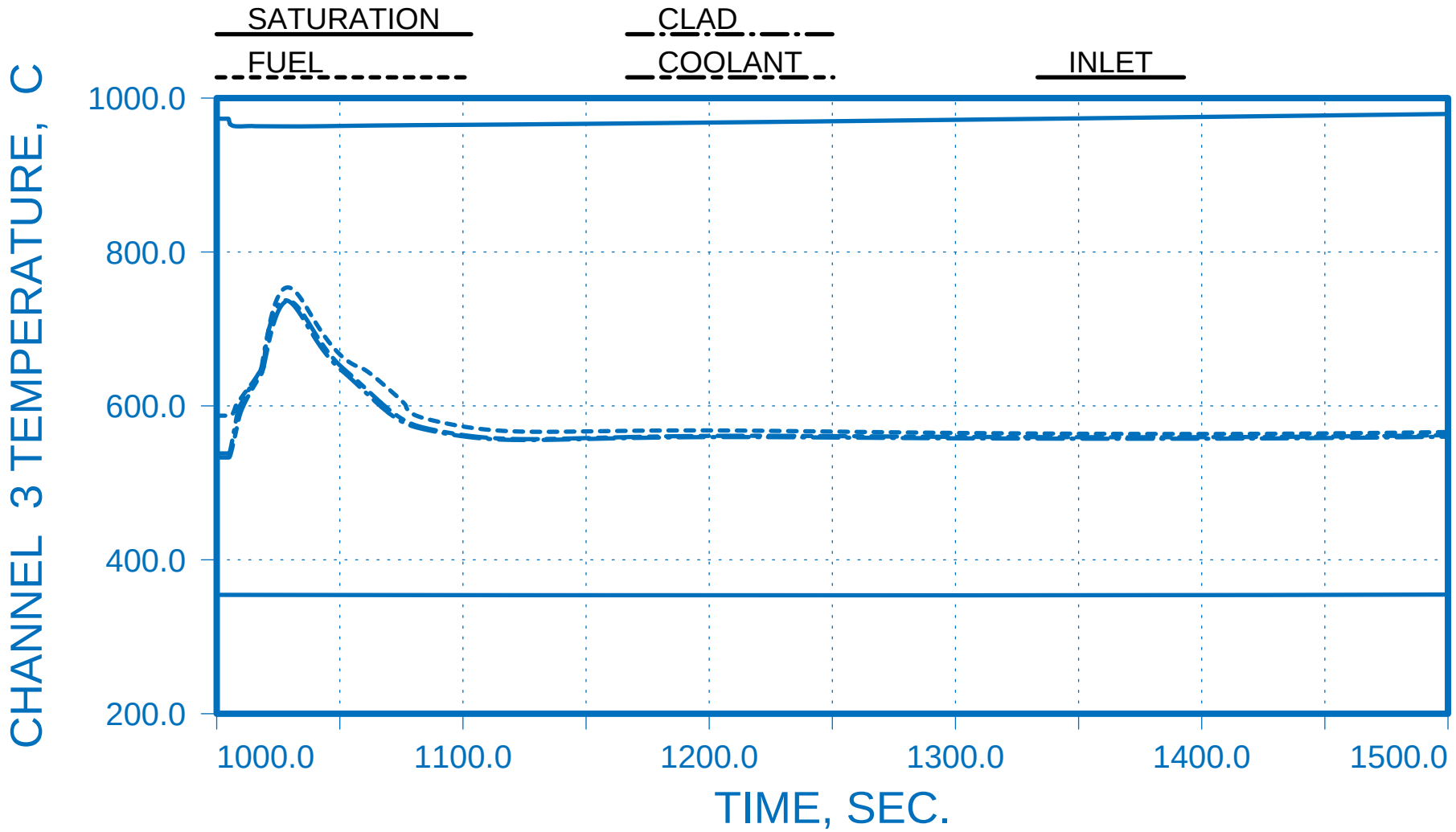

CDA Accommodation

- **A sodium-cooled, pool-type, metallic fuelled reactor design can be configured to survive all ULOF, UTOP, and ULOHS accident initiators with substantial margin to coolant boiling, cladding failure, or fuel melting**
  - **In FFTF and CRBRP, these initiators lead to core disruption and the potential for energetics and containment challenge**
  - **In SAFR, PRISM, and similar designs, unprotected accident initiators result in reduced accident consequences, short of coolant boiling and fuel disruption**
- **Progression to severe accident consequences requires assumption of very low probability initiators (triple fault?)**
  - **Assessment of severe accident consequences may best be carried out within the PRA framework, not necessarily related to a deterministic accident sequence**

Safety Analysis Methods

- See paper by Fauske (1976) for LMFBR models and codes
- FFTF and early CRBRP core disruption analysis was performed with the SAS3A (SAS3D) computer code at Argonne
  - HEDL used the MELT code for UTOP analysis (ULOF at ANL)
- The SAS4A code was developed at Argonne with modeling appropriate for initiating phase core disruption analysis of higher void worth core designs
  - Mainly one-dimension modeling appropriate until melting of hexcans
- The SIMMER code development began at about the same time at LANL for analysis of the 'transition' phase of the core disruptive accident; whole-core two dimensional model
  - The VENUS code had been developed earlier at ANL for analysis of the disassembly phase
- The SASSYS-1 code was developed later for whole-plant analysis
- Focus today on Argonne SAS4A and SASSYS-1 codes

SAS4A/SASSYS-1 Computer Code Background

- **Developed at ANL for transient analysis of liquid metal reactor core disruption and systems analysis**
  - **Originally developed to support CRBRP licensing**
  - **Safety margin assessment in design basis accidents (DBA) and anticipated transients without scram (ATWS); SASSYS-1**
  - **Consequence assessment in severe accidents; SAS4A**
- **Development continued during the Integral Fast Reactor (IFR) program (metallic fuel)**
- **Heavy liquid metal coolant options added during the Advanced Accelerator Applications (AAA) program**
  - **Water versions developed in NPR and international programs**
- **Modeling validated by applications to testing data from TREAT, EBR-II, and FFTF**
- **World-wide standard code for LMR safety analysis; Germany, Japan, France, Italy, Russia; additional validation with CABRI test data**

SAS4A/SASSYS-1 Modeling Features

- **Single and multiple pin subassembly thermal hydraulics; multiple subassemblies for whole-core simulation**
- **Two-dimensional pin heat transfer**
- **Single and two-phase coolant dynamics (coolant boiling, fission gas release upon pin failure)**
- **Liquid metal coolants: Na, NaK, Pb, Pb-Bi**
- **Oxide and metallic fuel and cladding mechanics**
- **Reactor point and spatial kinetics with reactivity feedbacks; nodal diffusion and nodal transport options**
- **Primary and intermediate coolant systems thermal hydraulics with components (pumps, pipes, plena, valves, heat exchangers, steam generators)**
- **Steam power cycle with components (turbine, condenser, pumps, heaters, steam generators)**
- **Reactor and plant control systems**

SAS4A Models for Initiating Phase Core Disruption Analysis

- **SAS4A: Simulation of initiating phase CDA**
  - **Developed for higher-void-worth core applications (CRBRP); fuel disruption at above nominal power levels**
  - **Modeling validated with TREAT test data**
  - **Exported to Japan, France, and Germany; validation with CABRI test data**
- **SAS4A Fuel Disruption Models**
  - **Single-pin, multiple channel thermal hydraulics core model**
  - **DEFORM-4 (oxide) fuel pin mechanics model**
  - **Multiple slug/bubble coolant boiling model**
  - **CLAP cladding melting and relocation model**
  - **PLUTO2 fuel/coolant interaction model**
  - **LEVITATE fuel pin disruption model**

SAS4A/SASSYS-1 Single Pin Model

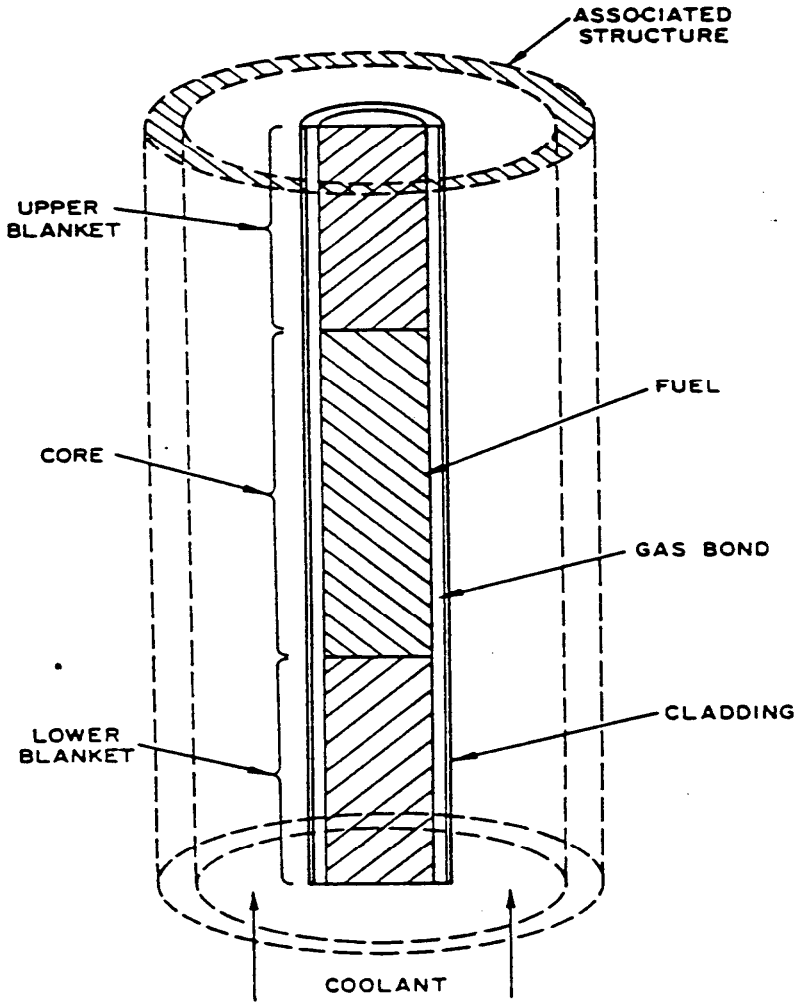

SAS4A/SASSYS-1 Single-Pin Channel Model

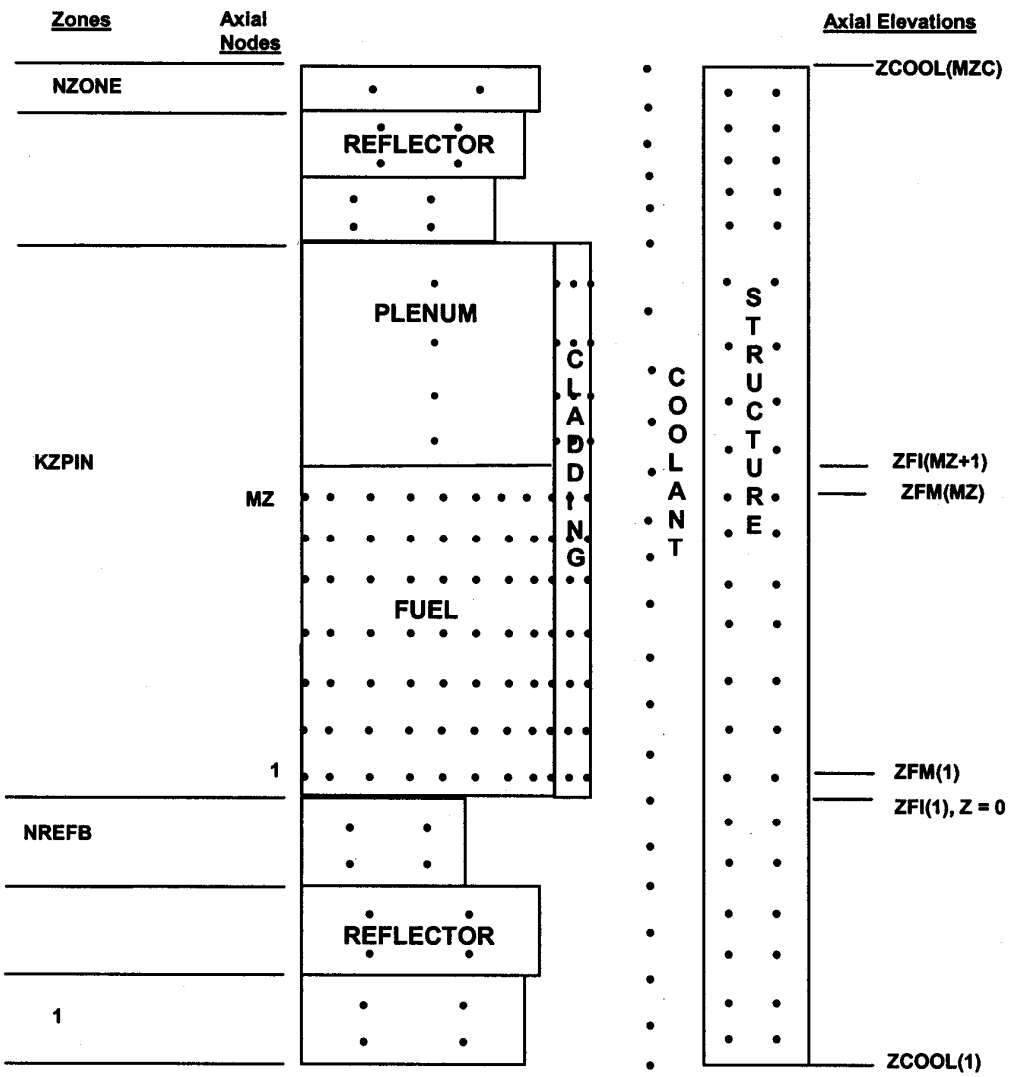

SAS4A Fuel Pin Heat Transfer Model

- One-dimensional, radial heat transfer at many axial locations
- Radial conduction through the fuel and cladding; conduction and radiation across the fuel/cladding gap
- Convective boundary condition to the axially flowing coolant from the cladding and the structure
- Initial, steady state conditions for the coolant mass flow and the axially-dependent channel power
- Steady state channel pressure drop in all channels adjusted to match the peak channel pressure drop with addition of a channel-dependent inlet orifice coefficient
- Transient channel flows computed from time-dependent inlet-to-outlet plena pressure drop

Channel Radial Heat Transfer Mesh

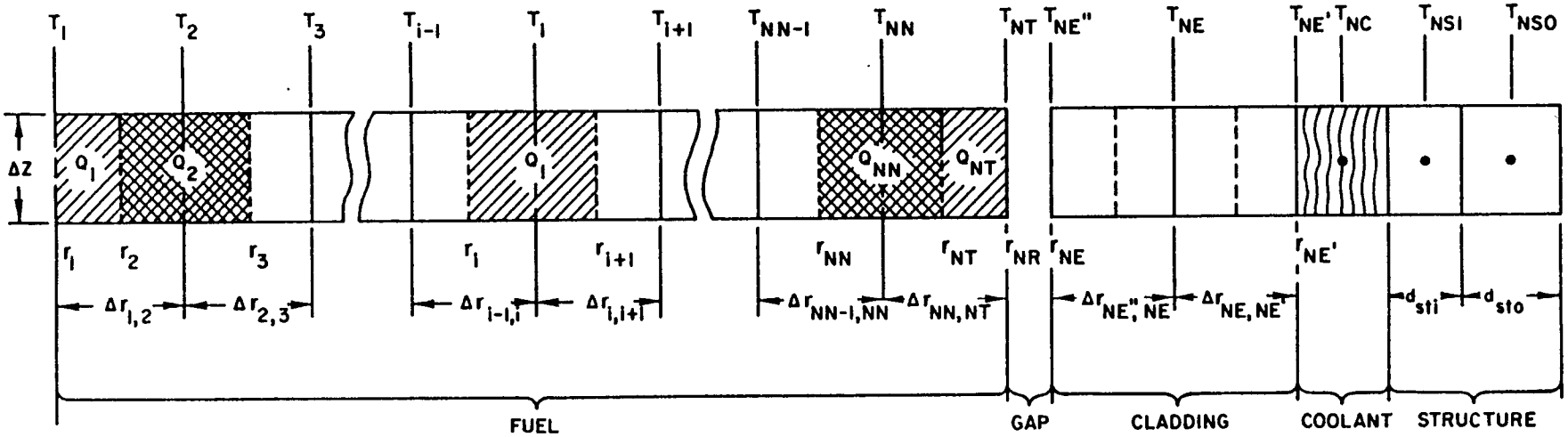

DEFORM-4 Model

- Mechanistic simulation of oxide fuel and stainless steel cladding behavior during irradiation and in a transient
- Porosity migration, grain growth, fission gas release, fuel cracking with crack healing, fission-gas-induced swelling, irradiation-induced steel swelling, gas plenum pressurization, fuel-cladding gap conductance
- Fuel and cladding mechanical behavior, thermal expansion, molten fission gas release and pressurization, cladding failure
- Original ANL model was modified at FZK (Germany) to be more applicable to European reactor materials and designs

DEFORM-4 Fuel/Cladding Deformation Model

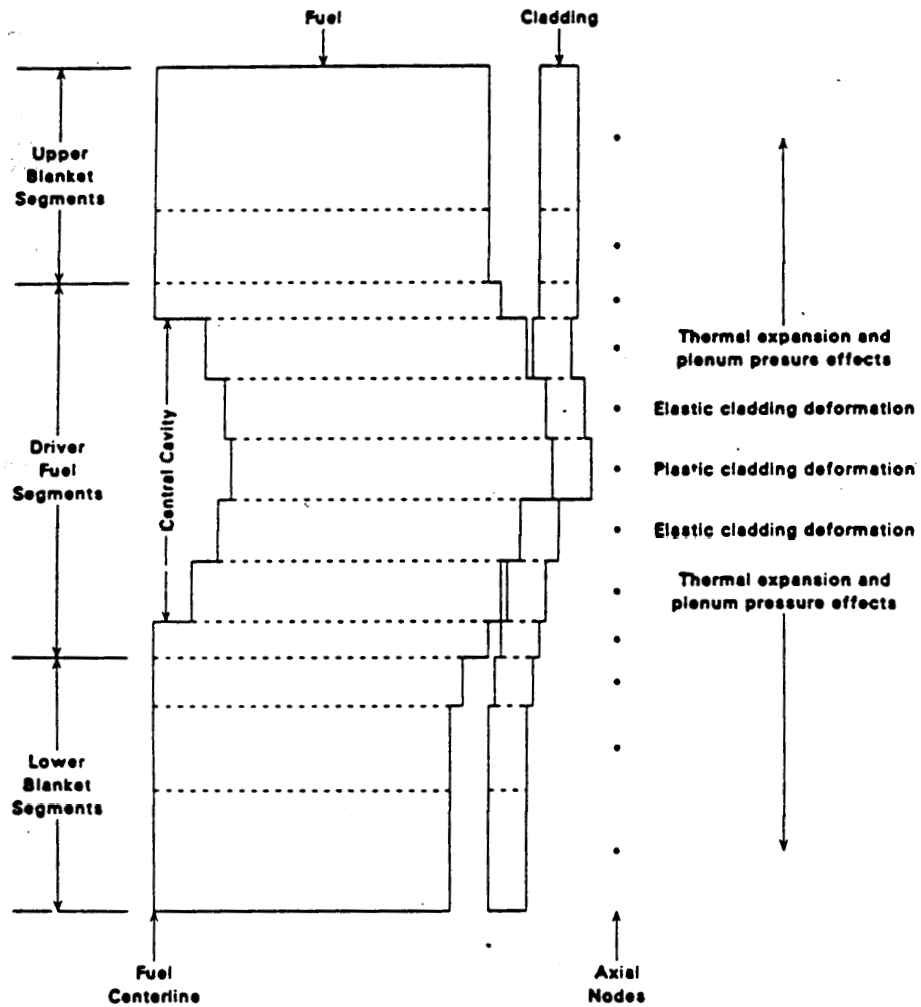

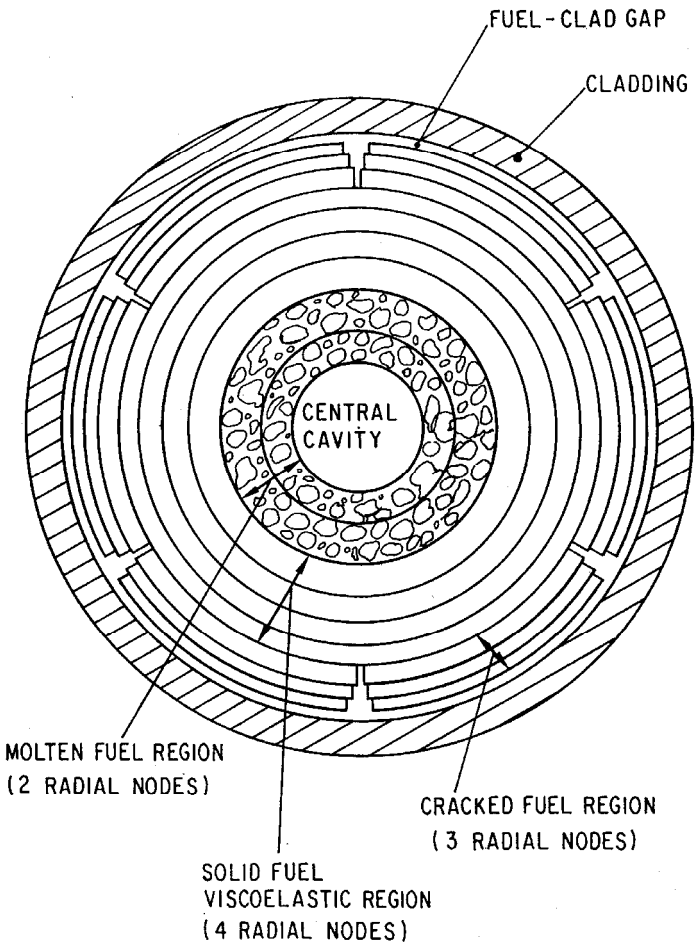

SAS4A Sodium Boiling Model

- **Single and two-phase sodium coolant flow in pin bundles**
- **Low-pressure liquid sodium boiling: multiple slug/bubble flow regime**
- **Cladding wetting: liquid sodium film on cladding and hexcan wall**
- **Simulates bubble initiation and growth, bubble motion, void formation, film evaporation and stripping, liquid flow reversal and chugging**
- **Loss of heat removal and reactivity effect of voiding**
- **Model validated by analysis of laboratory and reactor tests (e.g. R5 TREAT)**

SAS4A Sodium Boiling Model

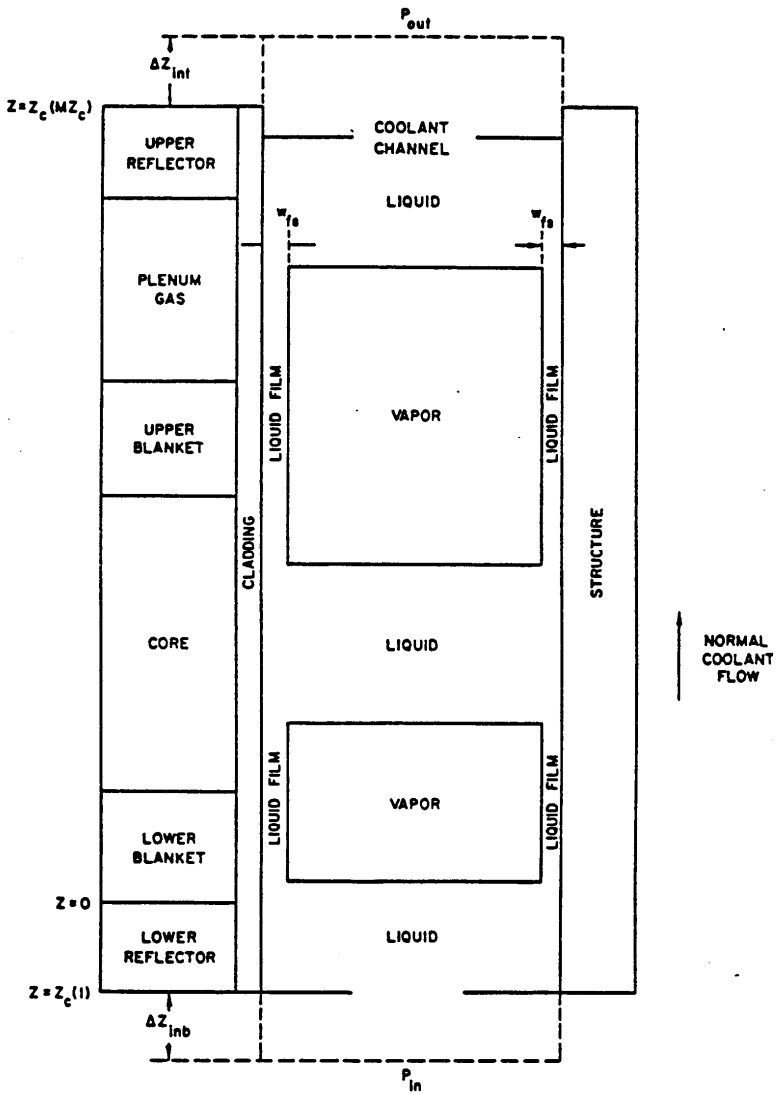

CLAP Cladding Melting and Relocation Model

- **Cladding melting and relocation following dryout of sodium film**
- **Motion due to coolant vapor flow (pressure gradient and shear forces) and gravity**
- **Molten cladding freezing and blockage formation**
- **Heat capacity loss with cladding motion**
- **Reactivity effect of steel removal from core**

CLAP Model

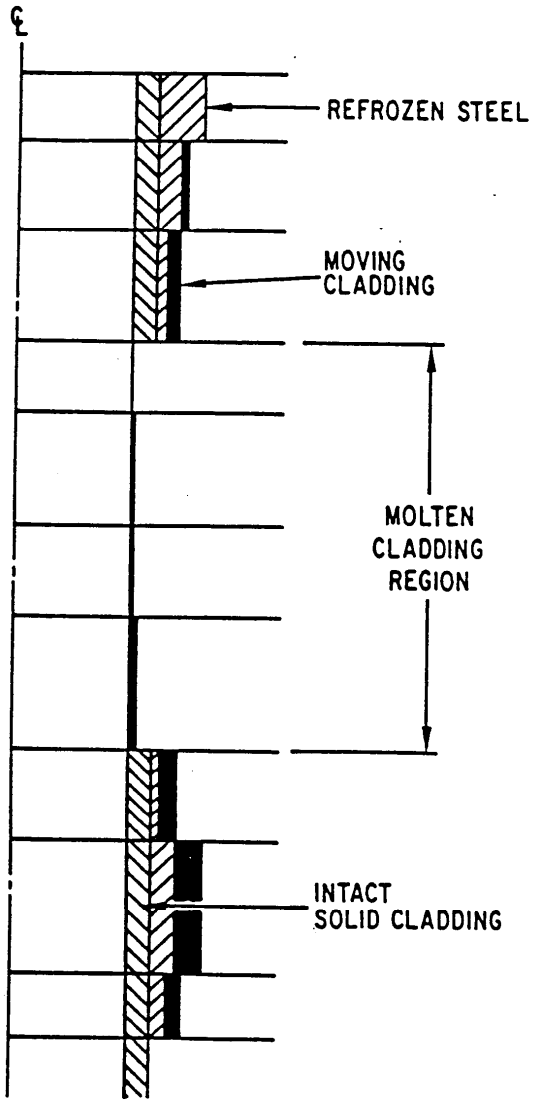
℄
REFROZEN STEEL
MOVING
CLADDING
MOLTEN
CLADDING
REGION
INTACT
SOLID CLADDING

PLUTO-2 Fuel Coolant Interaction Model

- **Model for fuel motion following cladding failure with flowing liquid coolant**
- **Fuel (in- and ex-pin), fission gas, and coolant dynamics following cladding failure in a channel with flowing liquid sodium**
- **Detailed material dynamics (two-fluid) with particulate of continuous flow regimes**
- **Fuel freezing and plate-out**
- **Cladding rip elongation**
- **Model validated by comparison to TREAT tests**
- **Modifications performed by JNC for CABRI test analysis**

PLUTO-2 Modeling

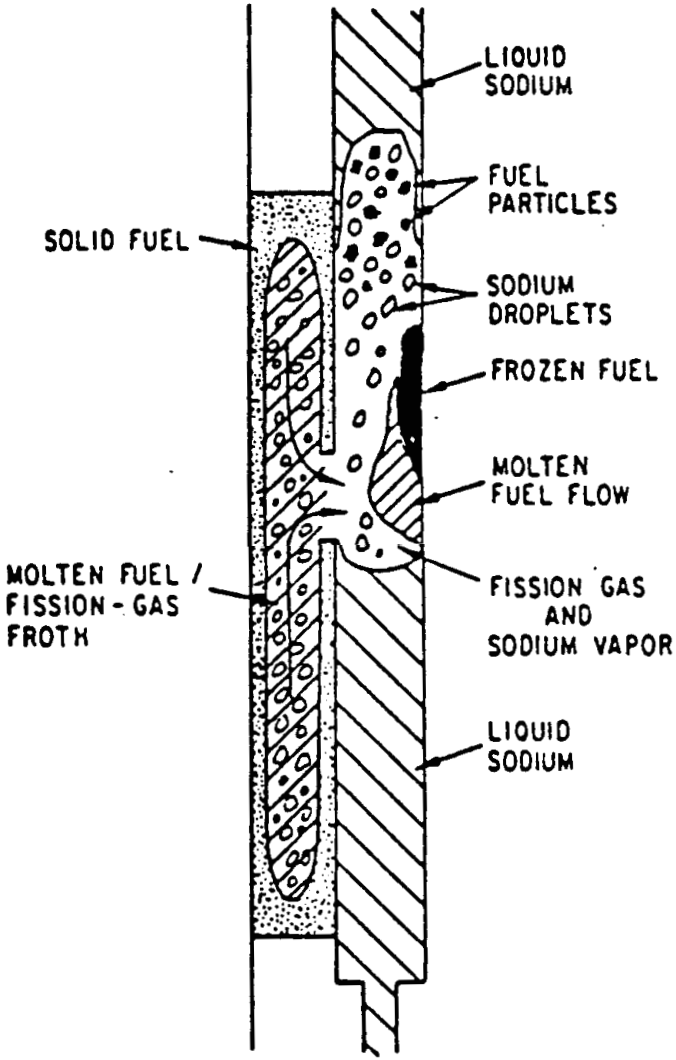

LEVITATE Fuel Pin Disruption Model

- **Model for fuel pin disruption in voided coolant channels**
- **Fuel (in- and ex-pin), fission gas, cladding, and coolant vapor dynamics following cladding failure and disruption in a channel voided of coolant**
- **Detailed material dynamics (two-fluid) with multiple flow regimes**
- **Solid fuel fragmentation ("chunk" formation) and relocation**
- **Molten fuel ejection and freezing**
- **Modifications performed by JNC for CABRI test analysis**

LEVITATE Modeling

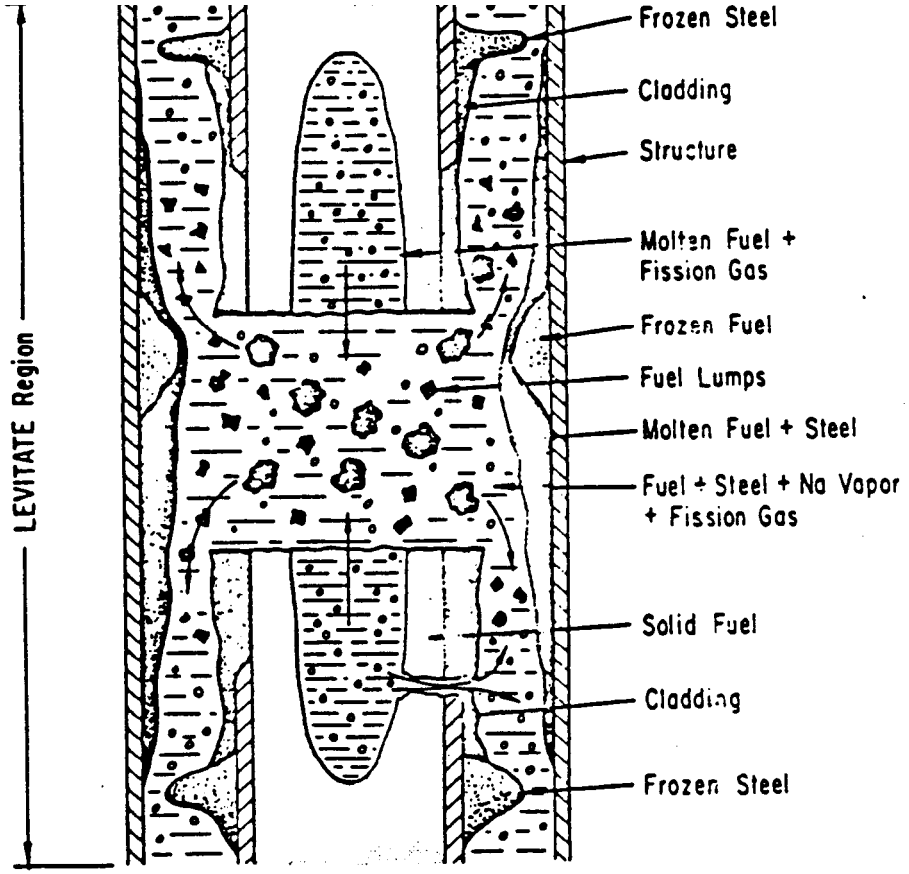

SASSYS-1 Models -- 1

- **SASSYS-1 modeling was originally developed for analysis of shutdown heat removal transients**
  - **Reactor and heat transport systems models for design basis and accident analysis**
- **Scope of analysis soon grew to cover the steam generators and balance-of-plant, and the control systems**
- **During the ANL Integral Fast Reactor program (1984-94) metallic fuel modeling was added, and SASSYS-1 was used to analyze ATWS events to assess passive safety performance**
  - **Extensive applications to EBR-II Shutdown Heat Removal Tests and FFTF Inherent Safety Tests (circa 1986)**
  - **EBR-II real time simulator**
  - **Concept evaluations in the IFR program, support to SAFR and PRISM**

SASSYS-1 Models -- 2

- **SASSYS-1 models include**
  - **Multiple-pin subassembly model**
  - **PRIMAR-4 coolant systems model**
  - **DEFORM-5 metallic fuel cladding failure model**
  - **SSCOMP metallic fuel properties model**
  - **FPIN-2 metallic fuel pin behavior model**

SASSYS-1 Multiple Pin Subassembly Model

Steady-state and transient calculation of fuel, cladding, coolant, and structure temperatures and coolant flow rates

- **Basic model applicable to sodium, lead, lead-bismuth, helium, and water coolants given appropriate constituent data**
- **Triangular pitch/hexagonal geometry or square pitch/square geometry.**
- **With or without subassembly wrapper can**
- **Coolant flow parallel to pins and between sub-channels driven by pressure differences and flow sweeping due to wire wrap**
  - **Forced convection and buoyancy-driven natural circulation**
- **Solve mass, energy, and momentum equations for coolant**
  - **Constitutive relations for cross-sub-channel mass flow and energy flow (turbulent mixing and thermal conduction)**
- **Solve conduction energy equation in fuel, cladding, and structure**

SASSYS-1 Multiple-Pin Subassembly Model

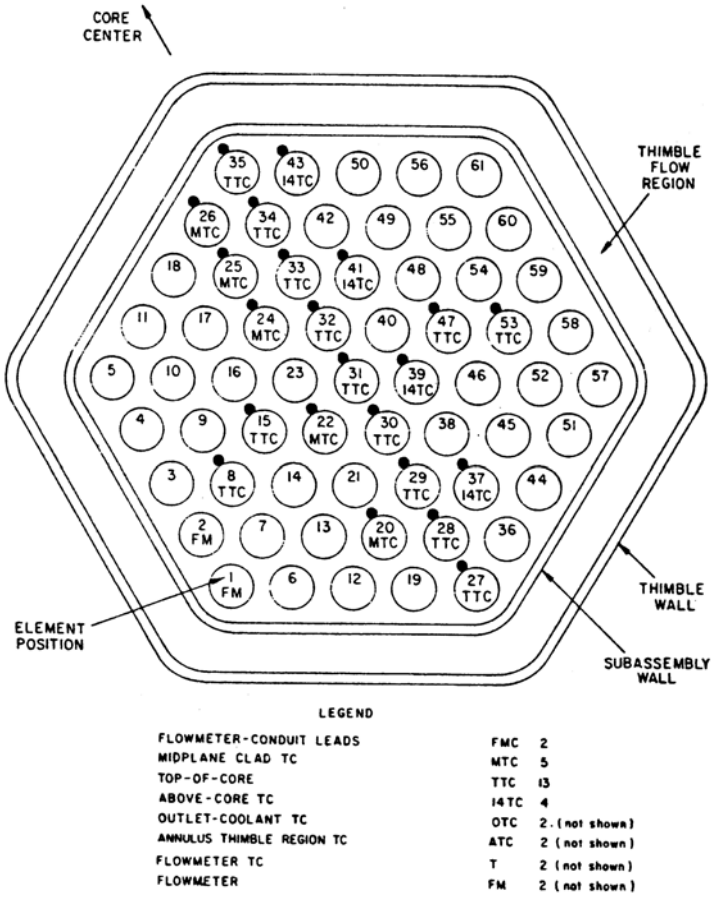

EBR-II XX09 Instrumented Subassembly

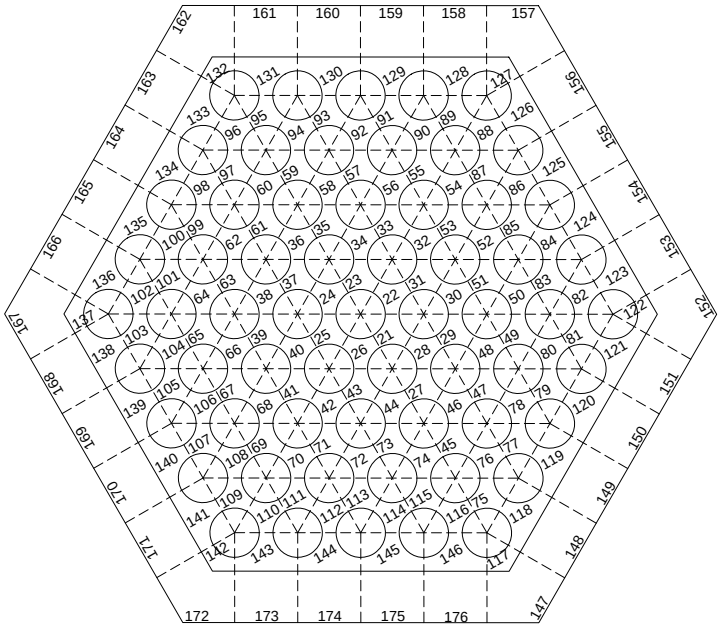

SASSYS-1 Model of XX09

SASSYS-1 Multiple-Pin Subassembly Coolant Temperature Results

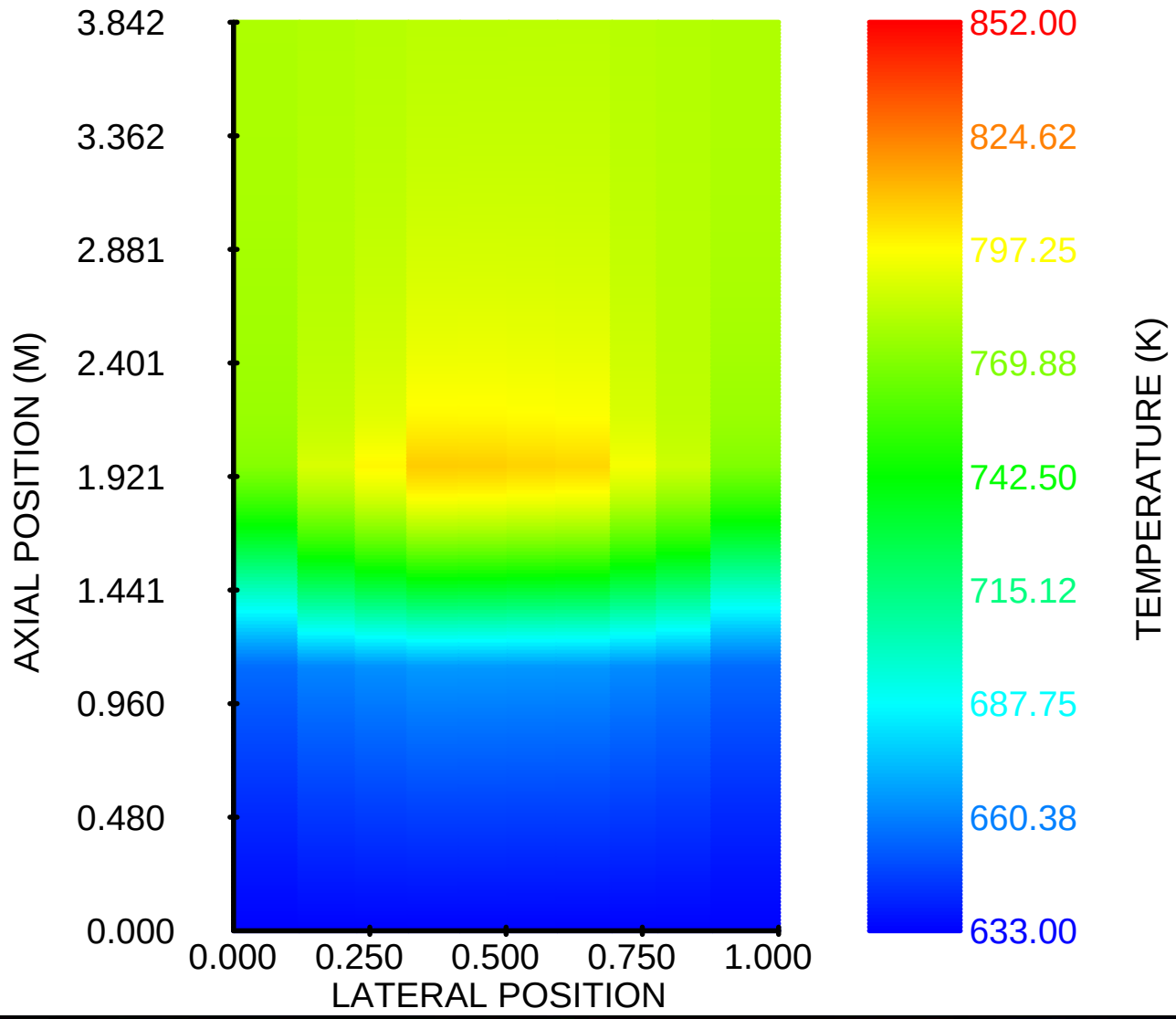

PRIMAR-4 Model

- **Thermal and hydraulic model for primary and intermediate sodium coolant loops**
- **General arrangement of volumes connected by segments**
- **Volumes are perfectly mixed, compressible liquid with or without cover gas**
- **Flow segments divided into elements for hydraulics simulation and into temperature groups for heat transfer**
- **Special models for pumps, valves, heat exchangers, steam generators**
- **Explicit core by-pass channels for control, blanket, and reflector assemblies**
- **Component-to-component heat transfer**
- **Explicit decay heat removal simulation: DRACS, RVACS, etc.**
- **Annular flow elements for IHX bypass flow**

PRIMAR-4 Model of a Small Pool-Type Reactor

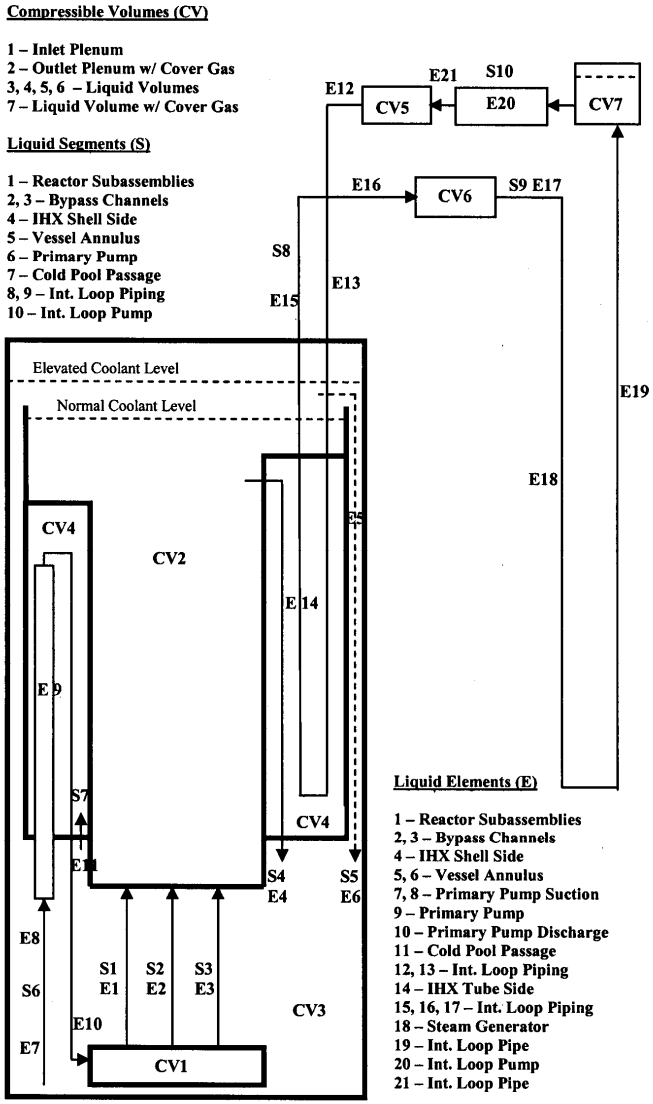

DEFORM-5 Metallic Fuel Cladding Failure Model

- **For stainless steel clad metallic fuel pins, predicts**
  - **Margins to cladding failure in DBA and BDBA transients**
  - **Cladding failure time and location in severe accident transients**
- **Simulates transient cladding mechanical response taking into account**
  - **Fuel and cladding temperatures**
  - **Fission gas pressure loading**
  - **Eutectic thinning of cladding at fuel/cladding interface**
- **Failure prediction based on plastic cladding strain and strain rate**
  - **Cladding damage based on evaluated life fraction correlation used in FPIN-M**
  - **Calculated cladding failure predictions show excellent agreement with TREAT test data**

SSCOMP Metallic Fuel Properties Model

- **Correlation of Integral Fast Reactor (IFR) program metallic fuel properties database**
  - **Enthalpy, specific heat, density, thermal expansion, and thermal conductivity for binary (U-Zr) and ternary (U-Pu-Zr) metallic fuel**
  - **Burnup/porosity corrections and uncertainties for thermal conductivity**
- **Automated data interpolation among experimental data for composition corrections**
- **Integrated implementation in SASSYS-1 fuel heat transfer and constituent models as an alternative to oxide correlations and table input for properties**
- **Basis for integration of future metallic fuels data and phenomenological models**

FPIN-2 Metallic Fuel Pin Behavior Model

- **Validated model for fuel pin fuel and cladding mechanical behavior developed by John Kramer and Tom Hughes**
  - **Integrated with SASSYS-1 by Tanju Sofu**
  - **Driven by SASSYS-1 calculated fuel and cladding temperatures**
- **Models elastic, plastic, thermal, and swelling phenomena**
  - **Rigorous mechanical model based on force-displacement formulation**
  - **Equilibrium equations derived from equations for virtual work**
  - **Implicit finite element solution method using linear shape functions**
- **Additional metallic fuel models for fission gas generation and release, molten cavity formation, gas plenum, fuel-cladding eutectic formation**
- **Cladding rupture predicted using a life fraction formulation based on measured data stress-strain data**

In closing…

- **Liquid sodium was initially selected as the coolant for fast reactors on the basis of 1) low pumping power requirement, 2) high volumetric heat capacity, and 3) high thermal conductivity.**
  - **Other favorable properties include low neutron absorption and very good compatibility (negligible corrosion) with structural materials**
- **Many reactor years (~300) of experience in the US and internationally have demonstrated the effectiveness of the liquid metal fast reactor concept for electricity generation and fuel production, as originally conceived by Fermi, Szilard, and Wigner**
- **The US reactor development program has also demonstrated that liquid metal cooling contributes to excellent inherent safety reactor performance, through**
  - **Natural circulation decay heat removal**
  - **Passive reactor power reduction in beyond-design-basis accidents**
- **Based on several decades of liquid metal fast reactor research and development, the concept has achieved the level of technical maturity necessary for commercial deployment**

Appendix A
General Design Criteria Cross-Reference between 10CFR50 Appendix A, ANSI/ANS 54.1, and DOE Order 5480.30

Appendix A GDC Comparison - 1

Criterion/Requirement	10CFR50, App. A	ANSI/ANS 54.1	DOE 5480.30
I. Overall Requirements			
Single Failure			8.c.1
Quality Standards and Records	GDC 1	3.1.1	8.c.2
Design Bases for Protection Against Natural Phenomena	GDC 2	3.1.2	8.c.3
Fire Protection	GDC 3	3.1.3	8.c.4
Protection Against Sodium and NaK Reactions		3.1.4	
Environmental and Dynamics Effects Design Bases	GDC 4	3.1.5	8.c.5, 8.c.10
Sharing of Structures, Systems, and Components	GDC 5	3.1.6	8.c.6
Sodium Heating Systems		3.1.7	
Siting			8.c.7
Human Factors Engineering			8.c.9
Safeguards and Security			8.c.11
Reactor Decontamination and Decommissioning			8.c.13
Support Systems			8.c.15
Non-Safety Class Structures, Systems, and Components			8.c.16

Appendix A GDC Comparison - 2

Criterion/Requirement	10CFR50, App. A	ANSI/ANS 54.1	DOE 5480.30
II. Protection by Multiple Fission Product Barriers			
Reactor Design	GDC 10	3.2.1	8.d.3.a
Reactor Inherent Protection	GDC 11	3.2.2	8.d.3.b
Suppression of Reactor Power Oscillations	GDC 12	3.2.3	8.d.3.c
Instrumentation and Control	GDC 13	3.2.4	8.d.5.a
Reactor Coolant Pressure Boundary	GDC 14	3.2.5	8.d.1.a
Reactor Coolant System Design	GDC 15	3.2.6	8.d.6.a
Containment Design	GDC 16	3.2.7	8.c.8
Electric Power Systems	GDC 17	3.2.8	8.d.2.a
Inspection and Testing of Electric Power Systems	GDC 18	3.2.9	8.d.2.b
Control Room	GDC 19	3.2.10	8.d.5.e
Remote Shutdown			8.d.5.f
Heating, Ventilation, and Air Conditioning (HVAC) Systems			8.d.7.a,b,c

Appendix A GDC Comparison - 3

Criterion/Requirement	10CFR50, App. A	ANSI/ANS 54.1	DOE 5480.30
III. Protection and Reactivity Control Systems			
Protection System Functions	GDC 20	3.3.1	8.d.4.a
Protection System Reliability and Testing	GDC 21	3.3.2	8.d.4.a
Protection System Independence	GDC 22	3.3.3	8.d.4.b
Protection System Failure Modes	GDC 23	3.3.4	8.d.4.c
Separation of Protection and Control Systems	GDC 24	3.3.5	8.d.4.d
Protection System Requirements for Reactivity Control Malfunctions	GDC 25	3.3.6	8.d.4.e
Reactivity Control System Redundancy and Capability	GDC 26	3.3.7	8.d.5.b
Combined Reactivity Control Systems Capability	GDC 27	3.3.8	8.d.5.c
Reactivity Limits	GDC 28	3.3.9	8.d.5.d
Protection Against Anticipated Operational Occurrences	GDC 29	3.3.10	8.d.4.f

Appendix A GDC Comparison - 4

Criterion/Requirement	10CFR50, App. A	ANSI/ANS 54.1	DOE 5480.30
IV. Fluid Systems			
Assurance of Adequate Reactor Coolant Inventory		3.4.1	
Quality of Reactor Coolant Pressure Boundary	GDC 30	3.4.2	8.d.1.b
Fracture Prevention of Reactor Coolant Pressure Boundary	GDC 31	3.4.13	8.d.1.c
Inspection of Reactor Coolant Pressure Boundary	GDC 32	3.4.3	8.d.1.d
Reactor Coolant Makeup	GDC 33		8.d.6.c
Reactor and Intermediate Coolant and Cover Gas Purity Control		3.4.4	
Intermediate Coolant System		3.4.5	
Inspection and Surveillance of Intermediate Coolant Boundary		3.4.6	
Residual Heat Removal	GDC 34	3.4.7	8.d.6.b
Emergency Core Cooling	GDC 35		8.d.6.d
Inspection of Emergency Core Cooling System	GDC 36	3.4.8	8.d.6.d
Testing of Emergency Core Cooling System	GDC 37	3.4.9	8.d.6.d
Containment Heat Removal	GDC 38		8.c.8

Appendix A GDC Comparison - 5

Criterion/Requirement	10CFR50, App. A	ANSI/ANS 54.1	DOE 5480.30
IV. Fluid Systems (cont.)			
Inspection of Containment Heat Removal System	GDC 39		8.c.8
Testing of Containment Heat Removal System	GDC 40		8.c.8
Containment Atmosphere Cleanup	GDC 41	3.5.11	8.c.8
Inspection of Containment Atmosphere Cleanup Systems	GDC 42	3.5.12	8.c.8
Testing of Containment Atmosphere Cleanup Systems	GDC 43	3.5.13	8.c.8
Cooling Water	GDC 44	3.4.10	8.d.6.e
Inspection of Cooling Water System	GDC 45	3.4.11	8.d.6.e
Testing of Cooling Water System	GDC 46	3.4.12	8.d.6.e

Appendix A GDC Comparison - 6

Criterion/Requirement	10CFR50, App. A	ANSI/ANS 54.1	DOE 5480.30
V. Reactor Containment			
Containment Design Basis	GDC 50	3.5.1, 3.5.2, 3.5.3	8.c.8
Fracture Prevention of Containment Pressure Boundary	GDC 51	3.5.4	8.c.8
Capability for Containment Leakage Rate Testing	GDC 52	3.5.5	8.c.8
Provisions for Containment Testing and Inspection	GDC 53	3.5.6	8.c.8
Piping Systems Penetrating Containment	GDC 54	3.5.7	8.c.8
Reactor Coolant Pressure Boundary Penetrating Containment	GDC 55	3.5.8	8.c.8
Primary Containment Isolation	GDC 56	3.5.9	8.c.8
Closed System Isolation Valves	GDC 57	3.5.10	8.c.8
VI. Fuel and Radioactivity Control			
Control of Releases of Radioactive Materials to the Environment	GDC 60	3.6.1	8.c.12.a, 8.c.14
Fuel Storage and Handling and Radioactivity Control	GDC 61	3.6.2	8.d.8.a, 8.d.8.d
Prevention of Criticality in Fuel Storage and Handling	GDC 62	3.6.3	8.d.8.b
Monitoring Fuel and Waste Storage	GDC 63	3.6.4	8.d.8.c
Monitoring Radioactivity Releases	GDC 64	3.6.5	8.c.12.b, 8.c.14

Appendix B
Listing of Design Basis Accidents for The Clinch River Breeder Reactor Plant PSAR Chapter 15

Appendix B CRBRP PSAR Table 15.1.3-2 Accident Events - 1

PSAR Section	Anticipated Events
15.2.1.1	Control Assembly Withdrawal at Startup
15.2.1.2	Control Assembly Withdrawal at Full Power
15.2.1.3	Seismic Reactivity Insertion (OBE)
15.2.1.4	Small Reactivity Insertions
15.2.1.5	Inadvertent Drop of a Single Control Rod at Full Power
15.3.1.1	Loss of Off-Site Electrical Power
15.3.1.2	Spurious Primary Pump Trip
15.3.1.3	Spurious Intermediate Pump Trip
15.3.1.4	Inadvertent Closure of One Evaporator or Superheater Module Isolation Valve
15.3.1.5	Turbine Trip
15.3.1.6	Loss of Normal Feedwater
15.3.1.7	Inadvertent Actuation of the Sodium/Water Reaction Pressure Relief System
15.7.1.1	Loss of One D.C. System
15.7.1.2	Loss of Instrument or Valve Air System
15.7.1.3	IHX Leak
15.7.1.4	Off-Normal Cover Gas Pressure In PHTS
15.7.1.5	Off-Normal Cover Gas Pressure In IHTS

Appendix B CRBRP PSAR Table 15.1.3-2 Accident Events - 2

PSAR Section	Unlikely Events
15.2.2.1	Loss of Hydraulic Holddown
15.2.2.2	Sudden Core Radial Movement
15.2.2.3	Maloperation of Reactor Plant Controller
15.3.2.1	Single Primary Pump Seizure
15.3.2.2	Single Intermediate Loop Pump Seizure
15.3.2.3	Small Water to Sodium Leaks In Steam Generator Tubes
15.3.2.4	Failure of Steam Bypass System
15.5.2.1	Fuel Assembly Dropped During Refueling
15.5.2.2	Attempt to Insert a Fuel Assembly Into an Occupied Position
15.5.2.3	Single Fuel Assembly Cladding Failure In Fuel Handling System
15.5.2.4	Cover Gas Release During Refueling
15.5.2.5	Heaviest Crane Load Impacts Reactor Closure Head
15.7.2.1	Inadvertent Release of Oil Through the Pump Seal (PHTS)
15.7.2.2	Inadvertent Release of Oil Through the Pump Seal (IHTS)
15.7.2.3	Generator Breaker Failure to Open at Turbine Trip
15.7.2.4	Rupture in the RAPS Cold Box
15.7.2.5	Liquid Radwaste System Failure
15.7.2.6	Failure In the EVST NaK System
15.7.2.7	Leakage from Sodium Cold Traps
15.7.2.8	Rupture In RAPS Noble Gas Storage Vessel Cell
15.7.2.9	Rupture in the CAPS Cold Box

Appendix B CRBRP PSAR Table 15.1.3-2 Accident Events - 3

PSAR Section	Extremely Unlikely Events
15.2.3.1	Cold Sodium Insertion
15.2.3.2	Gas Bubble Passage Through Core, Radial Blanket and Control Assembly
15.2.3.3	Core, Radial Blanket, and Control Rod Movement Due to Safe Shutdown Earthquake
15.2.3.4	Control Assembly Withdrawal at Startup - Maximum Mechanical Speed
15.2.3.5	Control Assembly Withdrawal at Power - Maximum Mechanical Speed
15.3.3.1	Steam or Feed Line Pipe Break
15.3.3.2	Loss of Normal Shutdown Cooling System
15.3.3.3	Large Sodium/Water Reactions
15.3.3.4	Primary Heat Transport System Pipe Leak
15.3.3.5	Intermediate Heat Transport System Pipe Leak
15.5.3.1	Collision of EVTM with Control Rod Drive Mechanisms
15.6.1.1	Primary Sodium In-Containment Storage Tank Failure During Maintenance
15.6.1.2	Failure of the Ex-Vessel Storage Tank Sodium Cooling System During Operation
15.6.1.3	Failure of Ex-Containment Primary Sodium Storage Tank
15.6.1.4	Primary Heat Transport System Piping Leaks
15.6.1.5	Intermediate Heat Transport System Piping Leak
15.7.3.1	Leak In a Core Component Pot
15.7.3.2	Spent Fuel Shipping Cask Drop from Maximum Possible Height
15.7.3.3	Maximum Possible Conventional Fires, Flood or Storms or Minimum River Level
15.7.3.4	Failure of Plug Seals and Annuli
15.7.3.5	Fuel Rod Leakage Combined with IHX and Steam Generator Leakage
15.7.3.6	Sodium Interaction with Chilled Water
15.7.3.7	Sodium-Water Reduction In Large Component Cleaning Vessel