Electrochemical Processing of Spent Nuclear Fuel

Dr. Michael Goff
Idaho National Laboratory

Nuclear Regulatory Commission Seminar
Rockville, MD
March 25, 2008

Also Know As

- Dry processing
- Pyroprocessing
- Pyrochemical processing
- Pyrometallurgical processing
- Electrometallurgical treatment
- Etc.

Definition 1

“Pyrometallurgical processing techniques involve several stages: volatilisation, liquid-liquid extraction using immiscible metal-metal phases or metal-salt phases, electrorefining in molten salt, fractional crystallisation, etc. They are generally based on the use of either fused (low-melting point) salts such as chlorides or fluorides (eg LiCl+KCl or LiF+CaF2) or fused metals such as cadmium, bismuth or aluminium.”

From Wikipedia

Definition 1

“Pyrochemical reprocessing methods use high temperature oxidation –reduction reactions in non-aqueous media to separate the actinides, U and Pu from the fission products. These methods exploit the differences in the volatilities or thermodynamic stabilities of the compounds of actinides and fission products to achieve the separation. Pyrochemical separations can be achieved by using electrochemical methods instead of chemical equilibrations.”

From PYROCHEMICAL Reprocessing of Fast Reactor Fuels on IGCAR Website

Electrochemical Technology

- **Work being performed in the United States is focused on an electrochemical process involving molten salts and liquid metals.**
- **Work is performed primarily at Idaho National Laboratory and Argonne National Laboratory.**
- **This talk will focus on that technology and its development.**

Electrochemical Processing Background

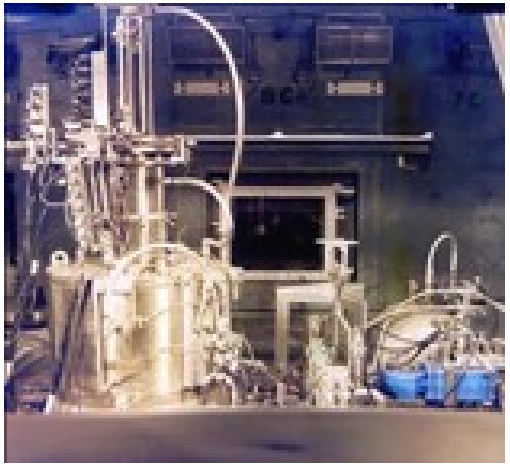

- **Present generation of technology for recycling or treating spent fuel started in the 1980s.**
- **Electrochemical processes were developed for the fast reactor fuel cycle.**
  - The fast reactor fuel does not require a high degree of decontamination.
- **Reasons technology pursued include:**
  - Capable of low purity products
  - Potential compactness (co-location with reactor)
  - Resistance to radiation effects (short-cooled fuel can be processed)
  - Criticality control benefits
  - Compatibility with advanced fuel types
- **Process was integrated with remote fuel fabrication for fast reactors.**

Melt Refining Performed Prior to Electrochemical Processing

Technology deployed in the late 1960s

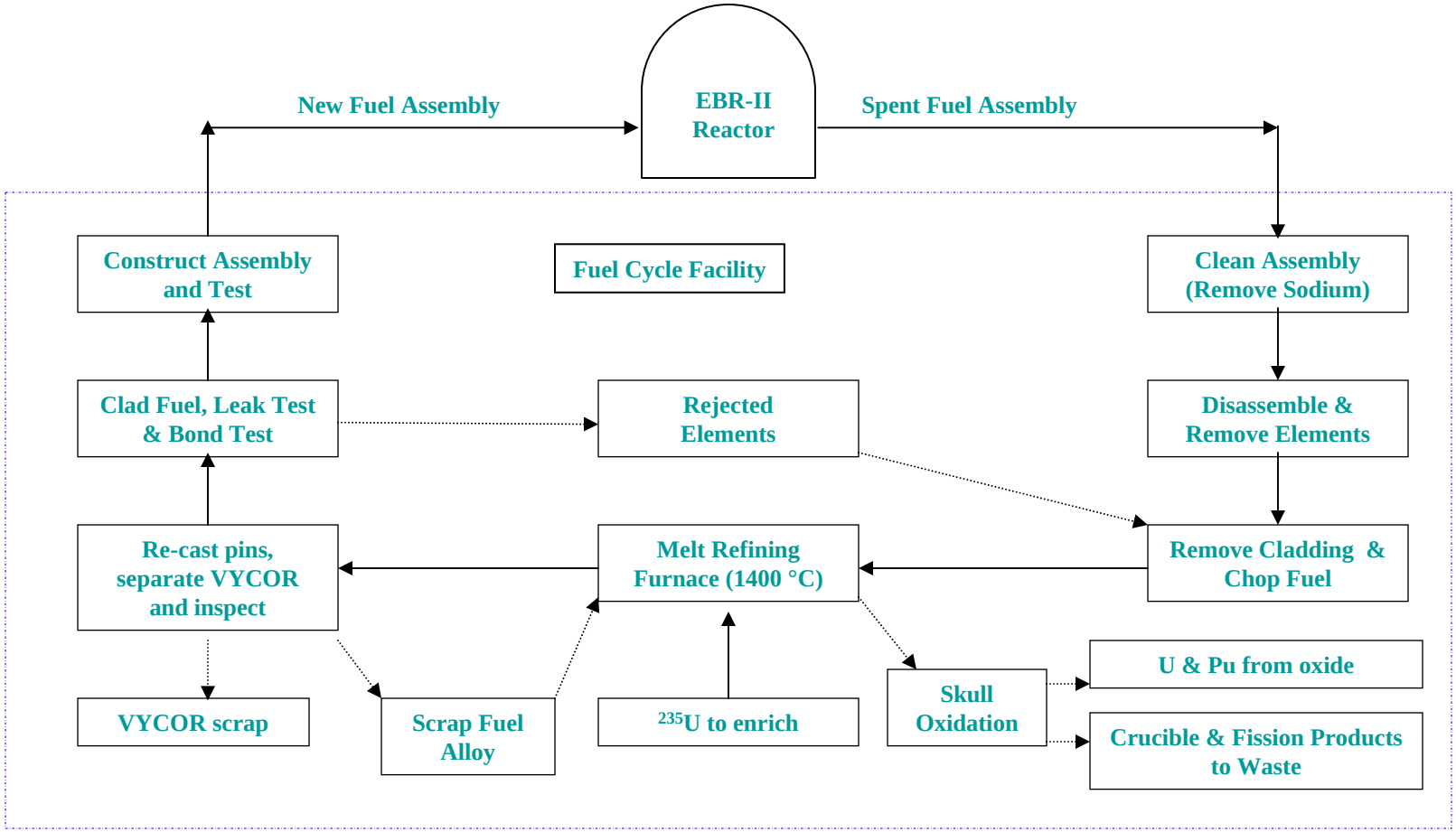

Chemical Bases for Electrochemical Processing

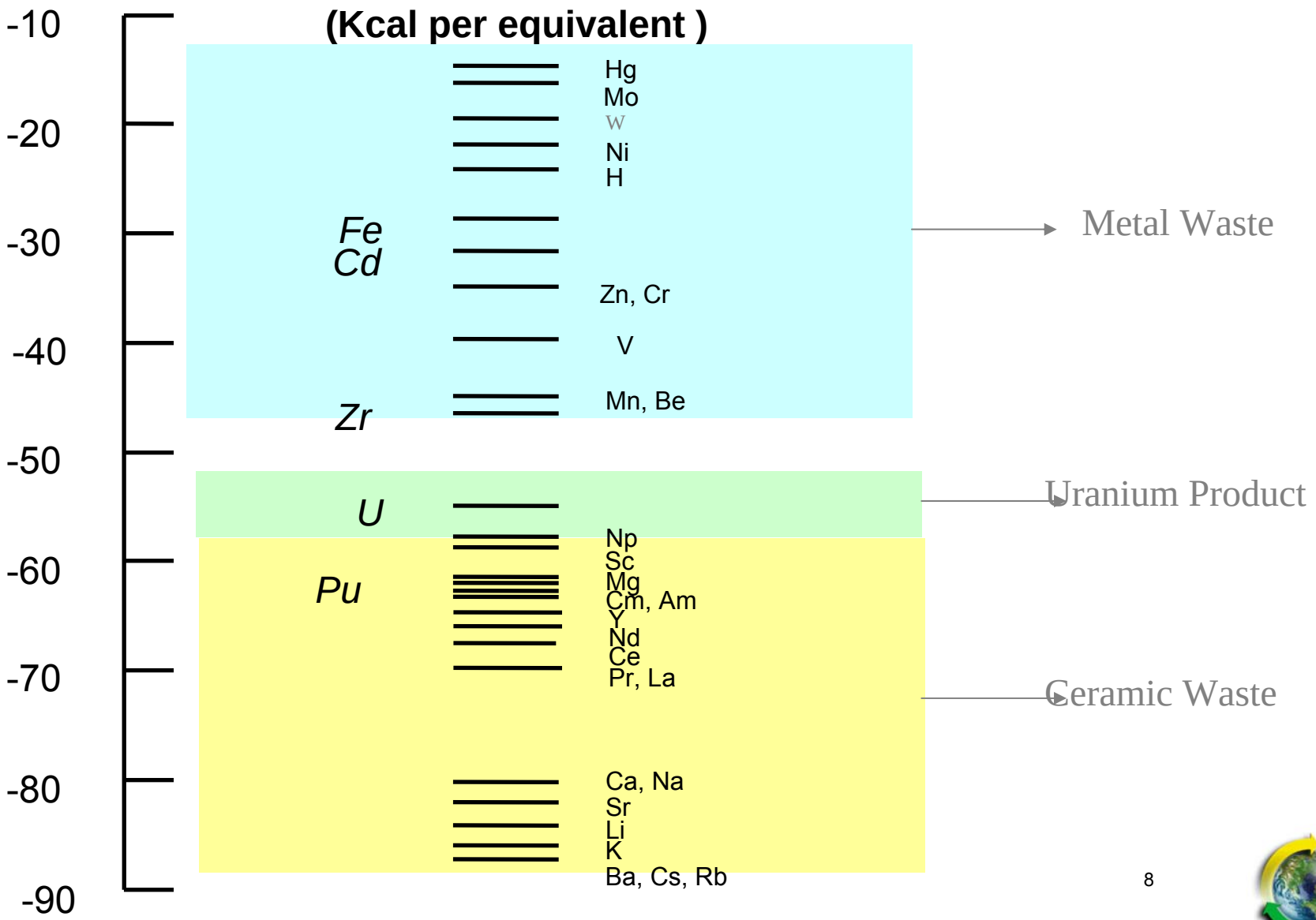

Electrochemical Process Flowsheet

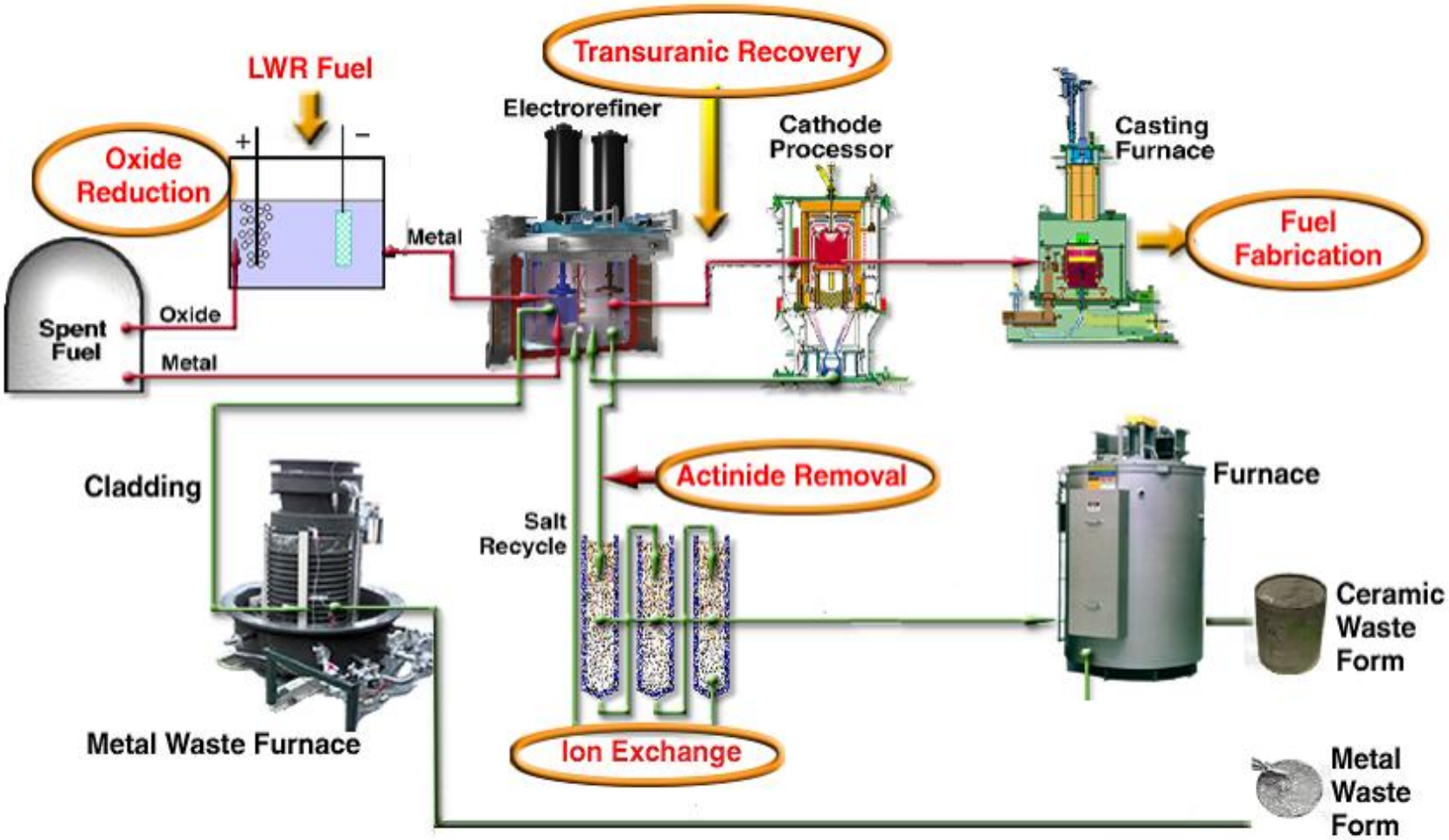

Electrorefining

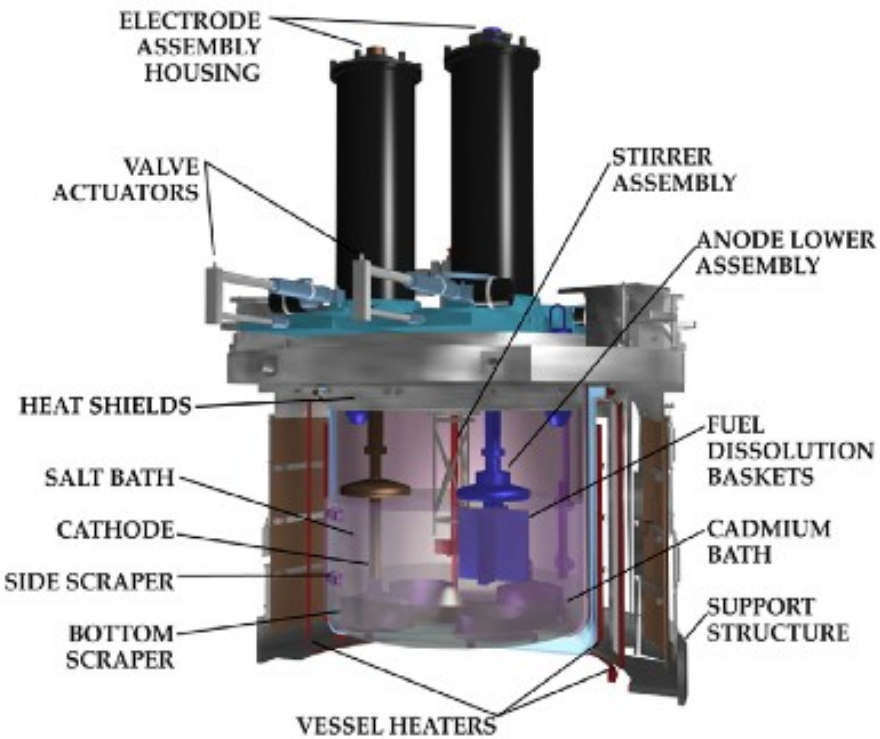

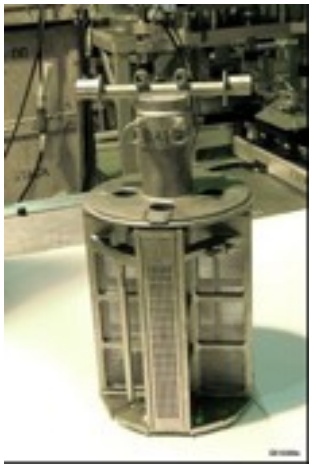

Cathode Processing

- **Salt must be separated from recovered actinides.**
- **Salt is distilled and recycled back to electrorefiners.**

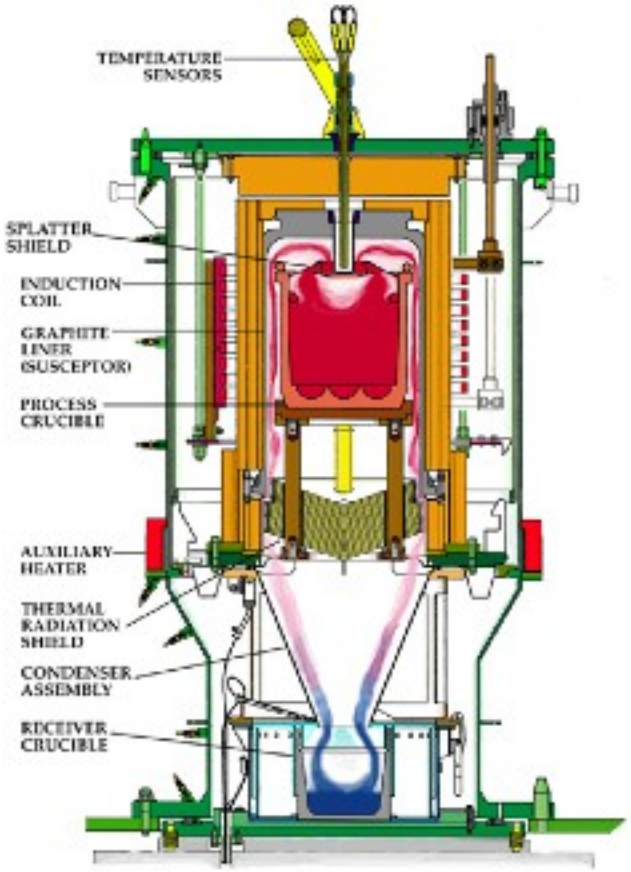

Electrochemical Treatment of EBR-II Spent Fuel

- **EBR-II used a sodium-bonded metallic fuel.**
  - Reactive materials (sodium and uranium metal)
  - Highly enriched uranium in driver fuel (53-78% U-235)
  - Approximately 1% plutonium in blanket fuel
- **Technology was formally demonstrated with spent fuel between 1996 and 1999.**
- **Demonstration was reviewed for the National Research Council.**
  - *Finding: The Committee finds that ANL has met all of the criteria developed for judging the success of its electrometallurgical demonstration project.*

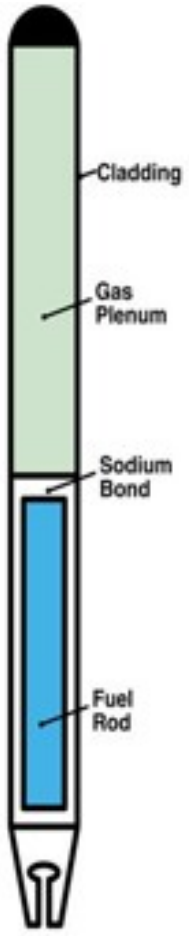

Schematic Drawing of EBR-II Fuel Element

Mission of Electrochemical Processing

- **Until 1994, focus was on demonstration of closed fuel cycle with a fast reactor.**
  - Recycle of fast reactor fuel
  - Limited work on production of fast reactor feed material from LWRs
- **In 1994, activities were redirected to treatment for disposal.**
  - Engineering-scale experience was gained with spent fuel.
- **With the formation of the Advanced Fuel Cycle Initiative (AFCI) in 2002 and the Global Nuclear Energy Partnership (GNEP) in 2006, recycle focus was renewed and stressed.**

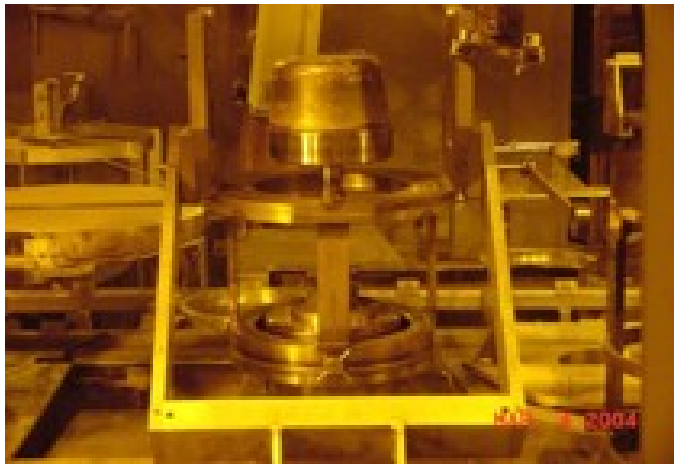

Electrochemical Processing Facilities

- The Fuel Conditioning Facility (FCF) is a one-of-a-kind electrochemical processing facility.
- FCF is used for treatment of fuel and demonstration of electrochemical process operations.
- Work includes development, qualification, and production of high-level waste.
- High-level waste work is performed in the Hot Fuel Examination Facility (HFEF).

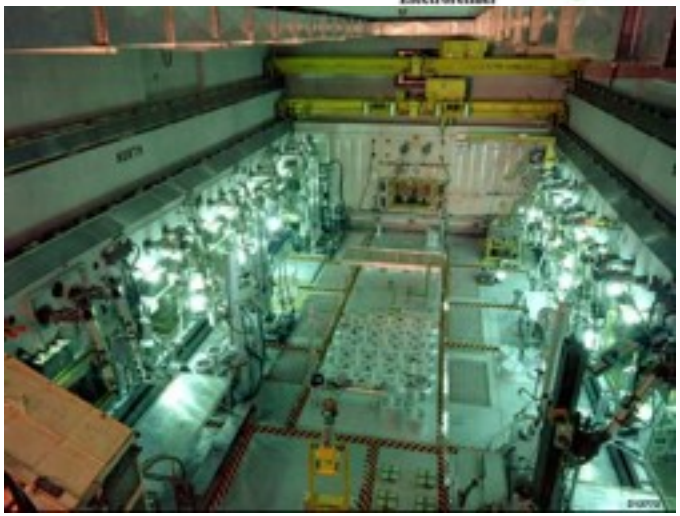

Hot Fuel Examination Facility

Processing Lines in FCF

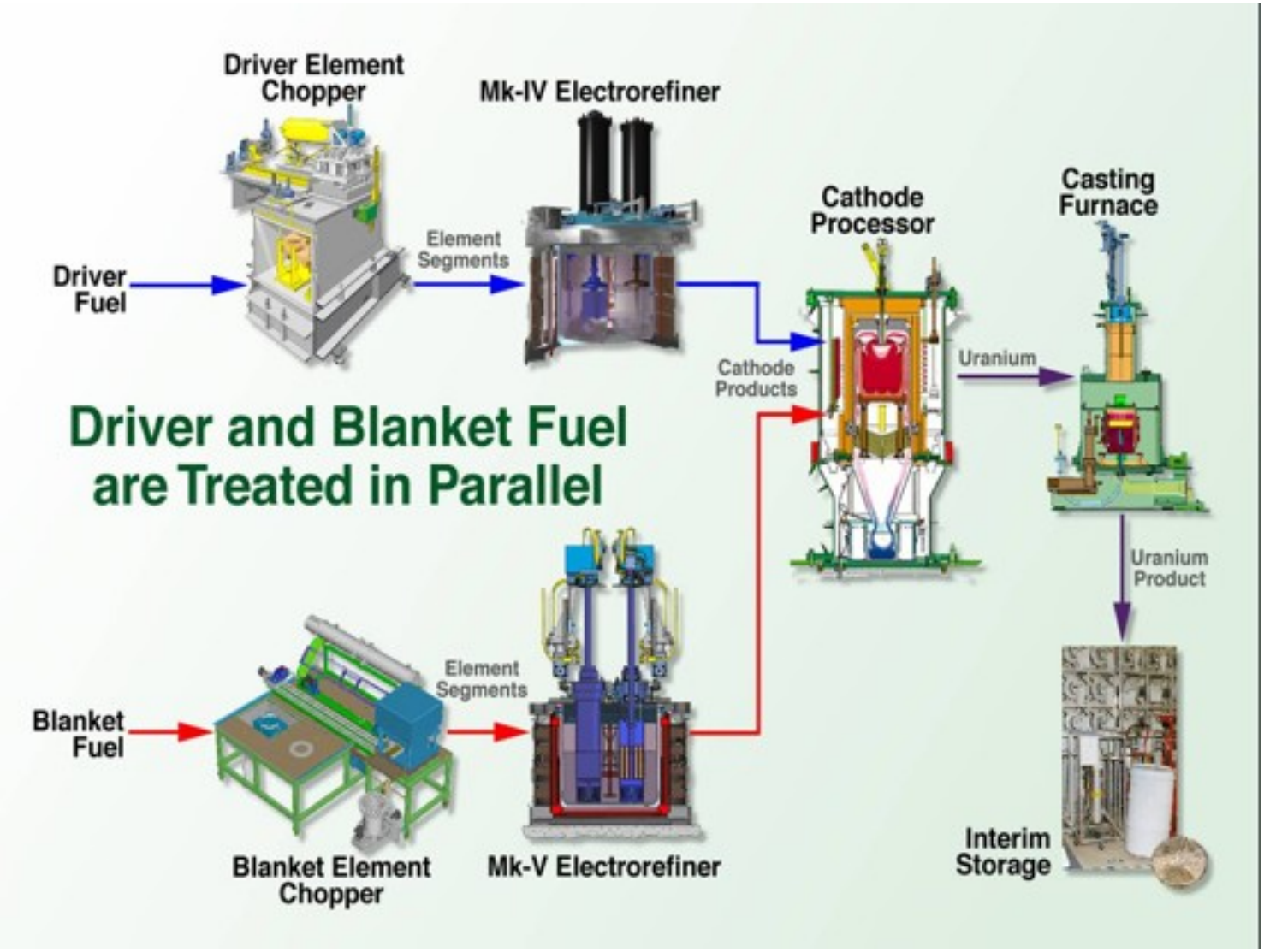

Electrochemical Treatment of Spent Fuel

- Electrochemical processing has been performed on the engineering-scale with irradiated fuel since 1996.
- Approximately 3.5 MTHM of fuel, including highly enriched uranium fuels, have been treated.
- Installed process equipment could support throughputs between 3 and 5 MTHM per year.
- Advancements in the technology are a major focus of GNEP.

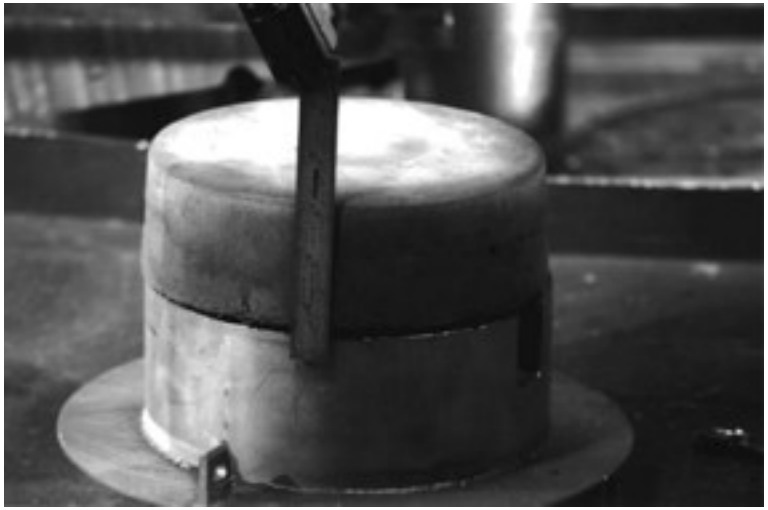

Hot Cell Electrorefiner Scale-up

- Throughout development of electrochemical processing, electrorefining has been scaled significantly for hot cell application.
- First hot cell electrorefiner has a current capacity of 3.5 amps.
- Mark IV electrorefiner has a current capacity of 200 amps.
- Mark V electrorefiner has a current capacity of 2400 amps.
- Technology has been scaled in cell by three orders of magnitude.

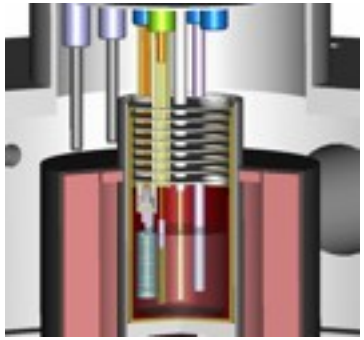

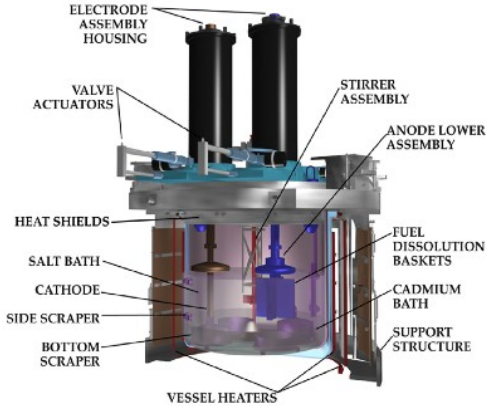

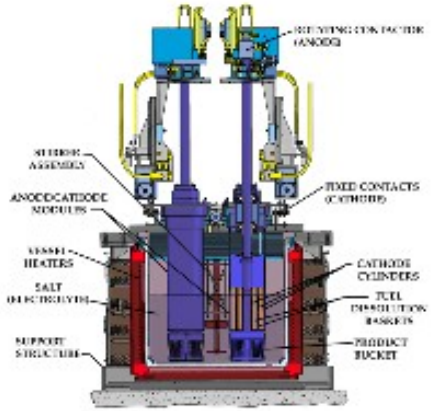

Electrochemical Processing Accomplishments

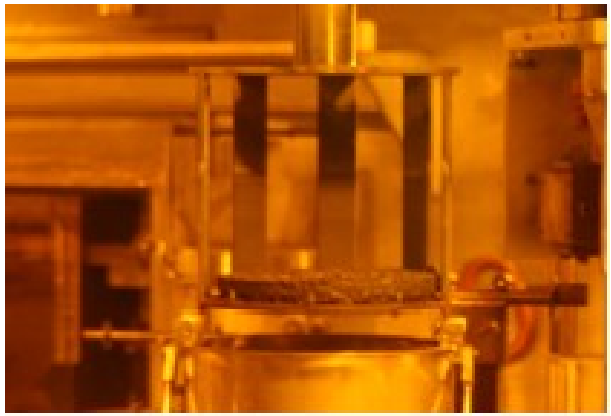

Recovered Transuranic Ingot

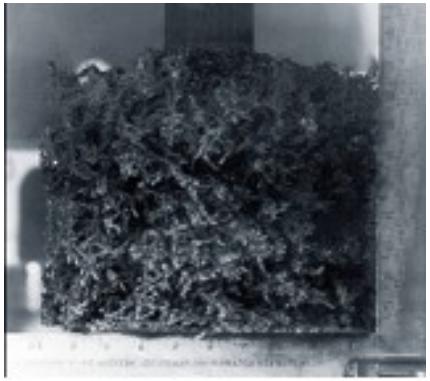

Uranium Deposit from Electrorefining

- **Group transuranic recovery tests have been successfully performed at laboratory and engineering-scales.**
  - Recoveries of more than 1 kg of transuranics have been obtained.
  - Purity requirements for fast reactor fuel have been demonstrated at both scales.
- **Engineering-scale electrorefining operations continue to demonstration high dissolution of actinides (99.7%).**

Electrochemical Processing Accomplishments

Zirconium-rich cathode

HfN-Coated Nb Crucible (6 liter)

- **Electrochemical recovery of zirconium has been demonstrated.**
- **Improved crucible materials for high temperature processing have been successfully tested at engineering-scale.**
  - Crucibles are reusable, which supports increased throughput.
  - Very little dross forms in new crucibles.

Metallic Fuels

- Process development work has focused on metallic fuels.
- Metallic fuels are amendable to remote fabrication.
- Metallic fuels are capable of high burnups.

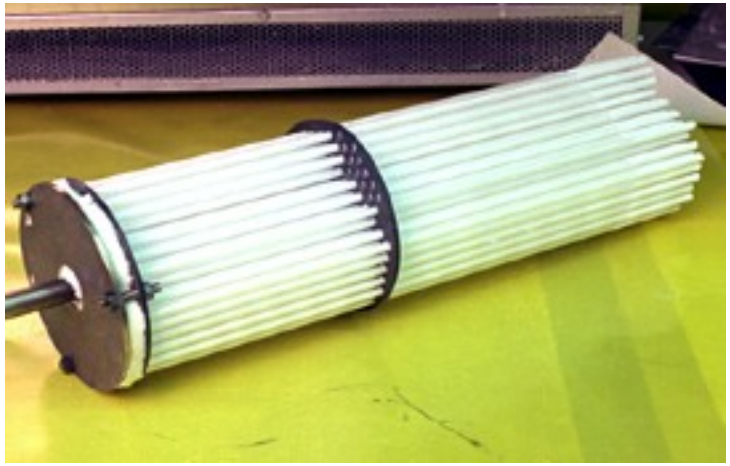

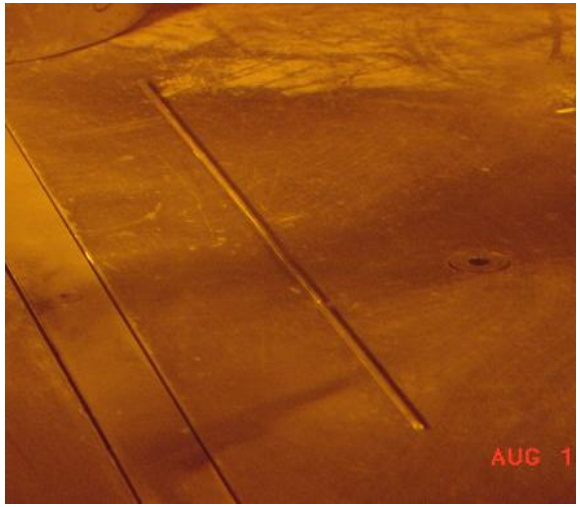

Electrolytic Reduction Process Scale-Up

- **Pre-conceptual layouts of an engineering-scale electrolytic reduction vessel (20 to 40 kg oxide fuel batch size) based on a planar electrode configuration have been generated.**
- **A pre-conceptual design of a facility to treat spent oxide fuel has been prepared to help focus research on critical activities.**

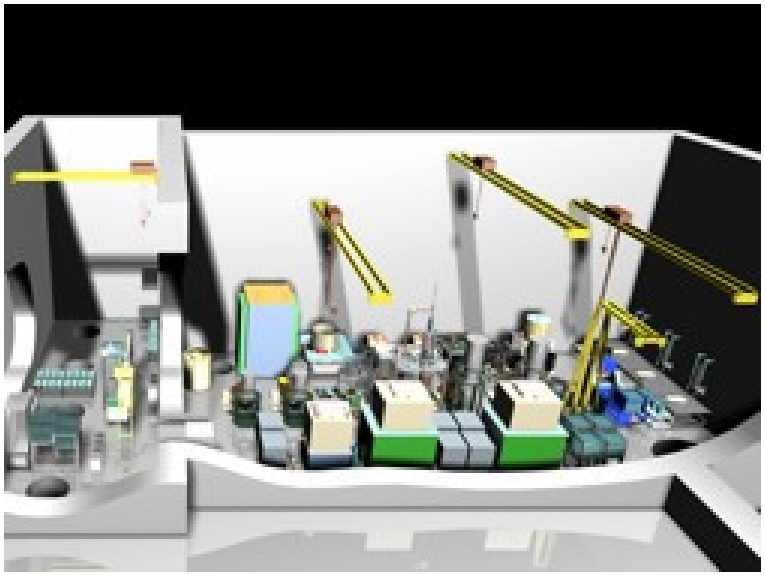

Chemical Bases for Electrochemical Processing

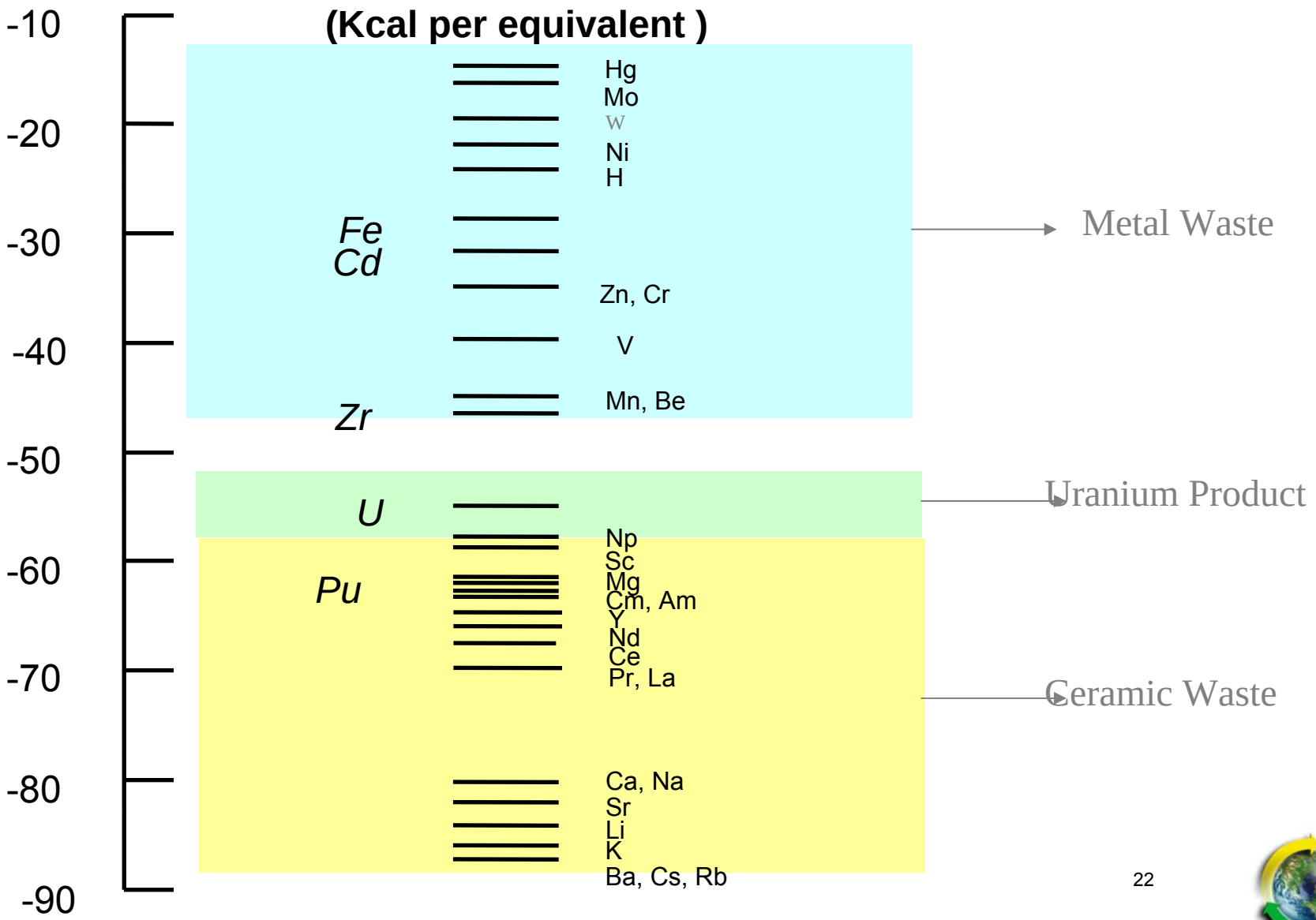

High-Level Wastes from Electrochemical Processing

- **Two high-level wastes are produced from electrochemical processing.**
- **A zeolite-based ceramic waste stabilizes fission products that form chlorides.**
- **A stainless-steel-15% zirconium metal waste stabilizes the cladding hulls and more noble fission products.**

Unit Cell of Zeolite A :
$Na_{12}[(AlO_2)_{12}\ (SiO_2)_{12}]$

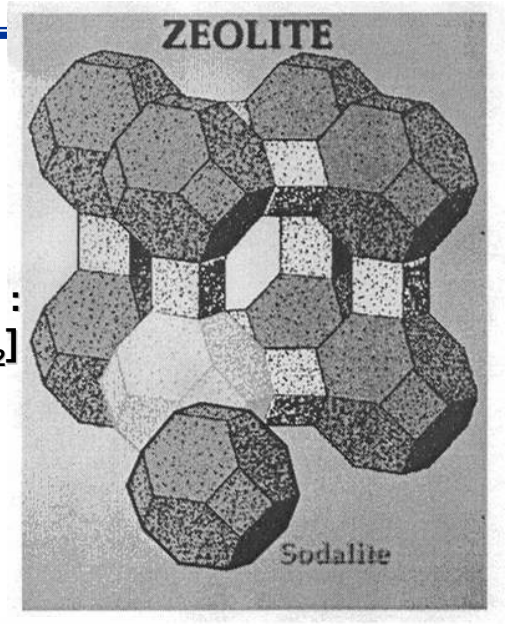

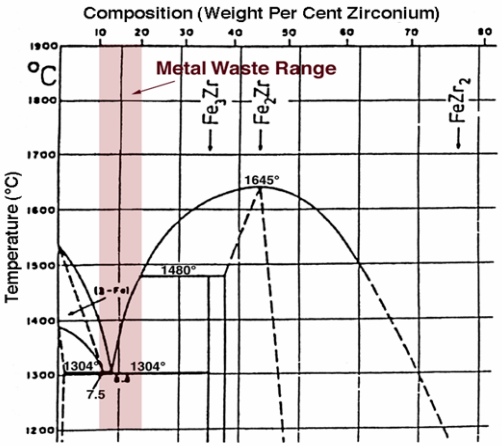

Fe-Zr Phase Diagram for Metal Waste

Ceramic Waste Process

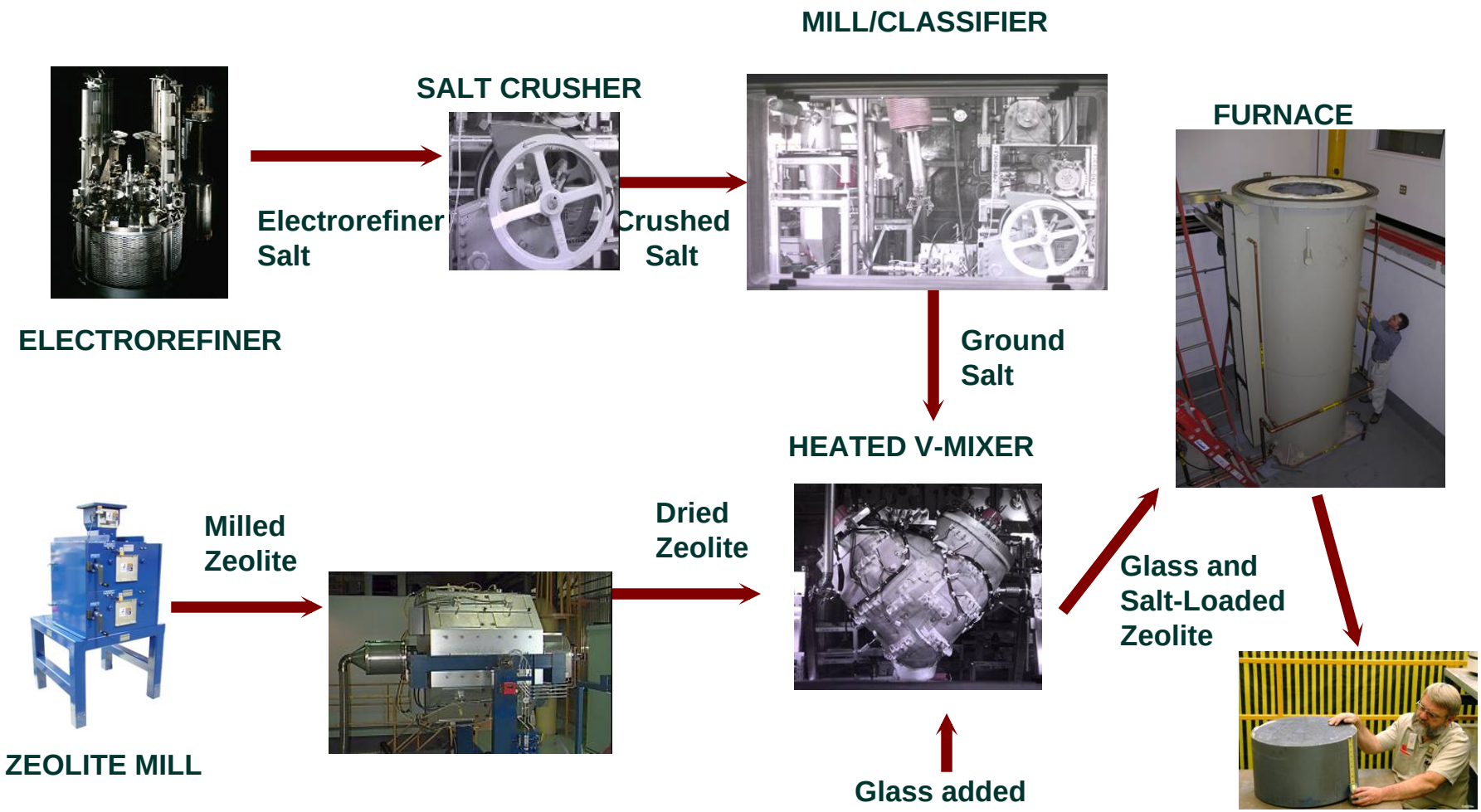

Production Scale Ceramic Waste Form Furnace

- **Installation was completed in March 2005.**
- **Process development testing is ongoing.**
- **Maximum operating temperature is 1025 ˚C.**
- **Dimensions of the internal cylindrical cavity are:**
  - Diameter of 0.6 m (2 ft)
  - Length of 3 m (10 ft)
- **System is capable of processing waste forms in excess of 320 kg.**

Metal Waste Form Process

CLADDING HULLS

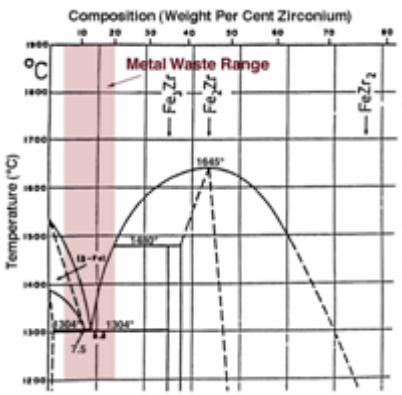

ZIRCONIUM

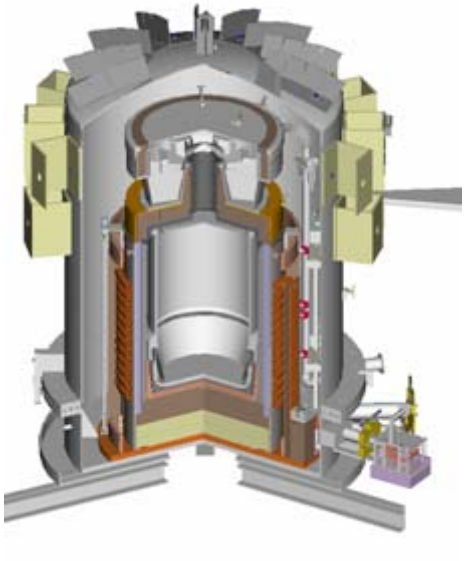

INDUCTION FURNACE

SALT

ELECTROREFINER

CERAMIC WASTE

INGOTS

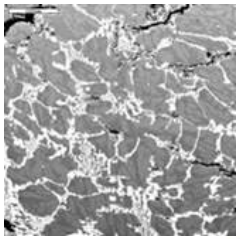

Metal Waste Development Activities

- **The Prototype Metal Waste Furnace is installed in a large inerted glovebox for processing testing.**
- **A series of test runs were completed to show equivalency of the Prototype to the Production Metal Waste Furnace in mockup.**
- **The Prototype furnace is being used to**
  - Finalize the full-scale production process (≤90 kg) which will be used in cell
  - Demonstrate the reliability of each process step, including sodium oxidation, salt distillation, and ingot formation prior to installation of the Production Furnace in a hot cell
  - Validate acceptability of the produced ingots through 5 qualification runs

Waste Form Qualification

- **Waste forms were extensively characterized for qualification.**
- **Waste form degradation models were developed for each waste form.**
- **Repository performance assessment calculations to assess the impact of the waste forms on the repository were performed.**
- **Report prepared for Congress addressing the disposal of the waste forms.**
  - DOE-NE, DOE-RW (Office of Civilian and Radioactive Waste Management), and DOE-EM (Environmental Management) concurred on disposal plans.
- **Waste forms are now classified formally as high-level wastes in DOE orders.**

HLW Data Package

A data package was compiled for the ceramic and metal waste forms. This document included 71 reports containing data and analyses needed to support acceptance into Yucca Mountain. Issues addressed in the reports include:

- waste form specifications
- waste form characteristics and degradation data,
- production information
- radiation effects
- product consistency
- impact of processing on waste characteristics
- leach behavior
- radionuclide distribution
- modeling of degradation behavior

International Collaborations

- **International collaborations on aspects of electrochemical processing have occurred with**
  - Japan
  - Korea
  - France
  - United Kingdom
  - Australia

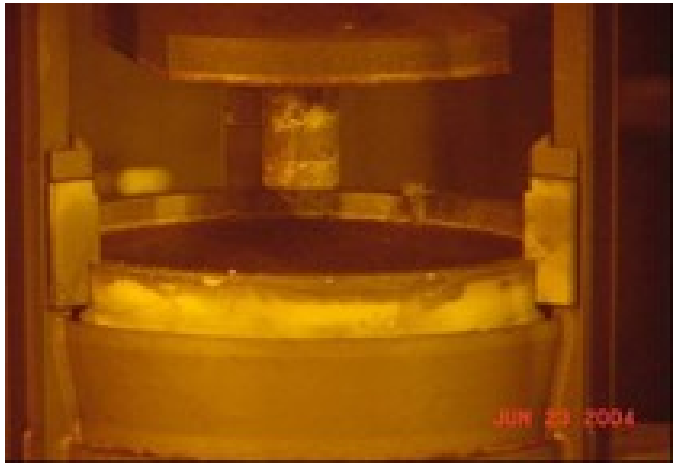

International Pyroprocessing Conference

- **INL hosted first International Pyroprocessing Research Conference in August.**
- **There were approximately 75 attendees, 34 from outside US.**
- **Papers were presented from 7 countries:**
  - US
  - ROK
  - Japan
  - France
  - United Kingdom
  - India
  - Russia
- **70 presentations were made.**
- **Next conference will be in Korea.**

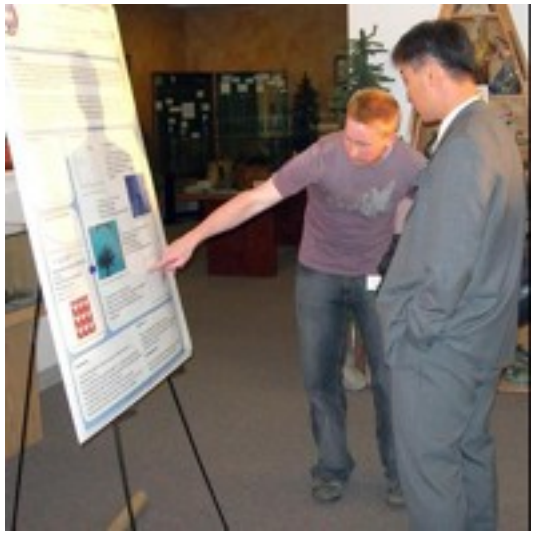

Summary

- Electrochemical fuel cycle can be used for recycle of fast reactor spent fuel and treatment of thermal reactor spent fuel to product a feed for fast reactors.
- Electrochemical processing of spent metallic nuclear fuel has been successfully demonstrated at engineering scale.
- Critical infrastructure exits domestically to support development and demonstration of technology.
- Work activities are focused on research, development, and demonstration in support of GNEP.
- Development and qualification of high-level wastes are integrated with overall process development.